Optimum design of cantilever reinforced concrete retaining wall using teaching learning based optimization algorithm

GEBRAİL BEKDAŞ
Department of Civil Engineering, Faculty of Engineering,
Istanbul University, Istanbul, Turkey
bekdas@istanbul.edu.tr

RASİM TEMÜR
Department of Civil Engineering, Faculty of Engineering,
Istanbul University, Istanbul, Turkey
temur@istanbul.edu.tr

Abstract: - The optimum design of reinforced concrete (RC) structures with the minimum weight is not an easy task due to concrete and steel reinforcement bars have extremely different mechanical behavior, i.e. compressive strength, tensile strength, and material cost. Thus, the optimum design of RC structures may not be provided by the conventional approaches. In this paper, the optimum design of RC cantilever retaining walls is investigated. RC design is made according to the requirements of the American Concrete Institute (ACI 318-05-Building code requirements for structural concrete). Recently developed metaheuristic algorithm teaching learning based optimization (TLBO) algorithm is employed for optimization process and in order to strengths and weaknesses of the algorithms results are compared with previous proposed methods, including particle swarm optimization (PSO), big bang big crunch (BBBC) and improved harmony search (IHS) algorithms. By using proposed methods various analyses have been done and according to results, the proposed method is more successful in sense of standard deviation, average cost, and computational cost. Consequently, the proposed method seems suitable and robust for optimum design of RC cantilever retaining walls.

Key-Words: - meta-heuristic methods; teaching learning based optimization; optimum weight; optimum design; reinforced concrete structures; cantilever retaining walls.

1 Introduction

In the engineering designs, two main aim; security and economy must provide together. Actually, the success of a design can be measure by using minimum sources, i.e. material, energy, money.

Design of reinforced concrete (RC) structures can be divided in five main steps; selecting cross section dimension, determining the internal forces of members according to defined external loads such as live, dead, winds, earthquake loads, etc., determining the required reinforcement area, selecting number and sizes of reinforcement bars and calculating total retaining wall material weight, respectively. As it is known, all these steps are in interaction each other. For example, cross section of a member is effective on internal forces and required reinforcement area, etc. Thus, the RC design provide minimum source, weight or cost is a nonlinear problem and it may never be provide with conventional approach. Metaheuristic algorithms such as genetic algorithm (GA) [1-2], particle swarm optimization (PSO) [3], big bang big crunch (BBBC) [4], harmony search (HS) algorithm [5], firefly algorithm (FA) [6], bat algorithm (BA) [7] can be employed for this challenging task.

Rao at al. [8] is developed a new metaheuristic by conceptualization of teaching-learning process. Thus, it is named teaching learning based optimization (TLBO) algorithm. Although first application is done less than five years, the TLBO has been applied wide variety of engineering problems, i.e., mechanical, electrical, robotic and structural engineering, etc [9-16].

First application on optimum design RC cantilever retaining wall is done in 1980s. In addition to RC design, the soil-structure interaction

must be taken into account during the design process. For that reason, the studies on this subject have been limited. But, after the first metaheuristic algorithm application on optimum design of retaining wall, the subject has been become popular [17-31].

2 Methodology

In 2011, Rao et al. [8] developed teaching learning based optimization (TLBO) algorithm from the inspiration of teaching-learning process in a classroom. In this process main aim is to increase level of knowledge of class. Teacher and learner (student) are both making an effort for this purpose. Teacher is the person who has higher level in class and duty of teacher is to educate learners in order improve the information of them about the subjects. Learners can also be gain information by interaction, searching, discussing the matters. For that reason, TLBO algorithm is used two partitions "teacher and learner phase" during finding optimum results.

Optimization process of TLBO algorithm can be summarized in five steps.

1st step: Design constants and ranges for design variables are determined in this step. These constants are height of stem, yield strength of reinforcement bars, compressive strength of concrete, elasticity modulus, specific gravity of steel and concrete, backfill slope angle, internal friction angles, cohesion of soil, safety factors for overturning, sliding and bearing, range of stem, heel projection and base thickness, range of diameter of reinforcement bars. Also, population size of class and maximum iteration number (stopping criteria) is defined.

2nd step: Initial solution matrix (class) is constructed by using vectors as much as population size. This vectors contains randomly generated values of design variables. In addition to design variables related with cross sectional dimension of retaining wall (see Fig. 1), there are also variables related with RC design (diameter and spacing of reinforcing bars of stem, toe and heel).

During the design there are 29 design constraints that must be provided by each solution vector. Some of these constraints are related with safety (overturning stability, sliding stability and bearing capacity) of retaining wall and the other ones are related with RC design (minimum bearing stress, flexural strength capacity of sections, shear strength capacity, minimum and maximum reinforcement areas, minimum and maximum bar spacing and development length of reinforcement bars) described in ACI 318-05 code.

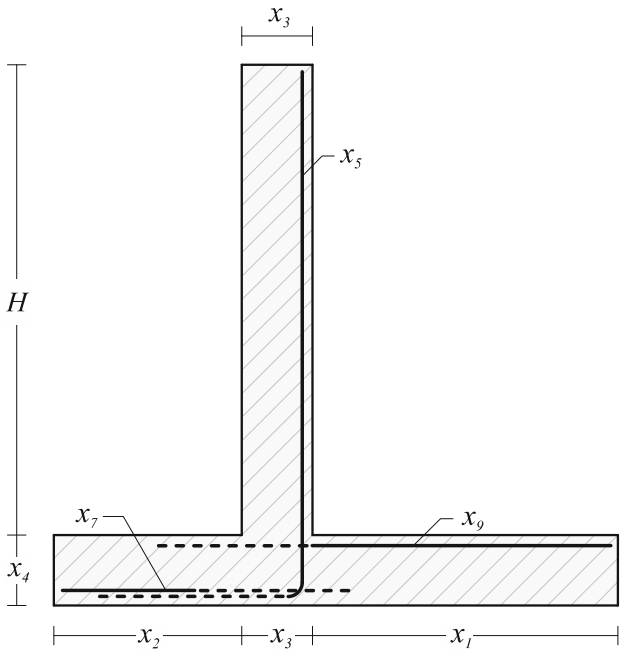

Fig 1. Design variables of a cantilever retaining wall model

Cross-section and forces action on a typical cantilever retaining wall can be seen in Fig. 1.

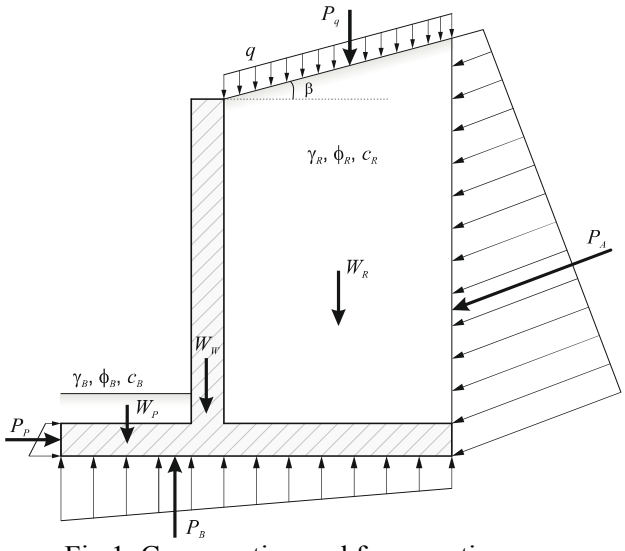

Fig 1. Cross section and forces acting on a cantilever retaining wall

3rd step: Then, the step named teacher phase is begun. After assigning the best vector in mean of minimum objective (weight) as teacher (see Eq. 1), new solution vectors (from i=1 to population size) are created according to Eq. (2)

$$X_{teacher} = X_{min\,f(X)} \tag{1}$$

$$X_{new,i} = X_{old,i} + rnd\,(0,1) \cdot \left(X_{teacher} - T_F \cdot X_{mean}\right) \tag{2}$$

in which *rnd* is random number between (0, 1), T_F is teaching factor (Eq. 3), X_{mean} is mean of the design variables, $X_{old,i}$ is previous value of design variable and $X_{new,i}$ is the new value of variable.

$$T_F = round\left[1 + rnd\left(0.1\right)\right] \rightarrow \left\{1-2\right\} \quad (3)$$

If the new solution is better than the old one, the new solution is accepted.

4th step: After updating vector in teacher phase, learner phase rules (see Eq. 4) is applied to solution vectors.

$$X_{new,i} = \begin{cases} X_{old,i} + r_i \cdot \left(X_i - X_j\right); & f\left(X_i\right) > f\left(X_j\right) \\ X_{old,i} + r_i \cdot \left(X_j - X_i\right); & f\left(X_i\right) < f\left(X_j\right) \end{cases} \quad (4)$$

In Eq. 4, X_i and X_j are randomly selected learners. In this selection the learner must be different from each other. As it done teacher phase, new and old solution is compared and better one is accepted.

5th step: Maximum iteration number is controlled. If it is satisfied the process is stopped if not the process is continue from 3rd step.

Whole optimization process can be seen in flowchart given in Fig. 3.

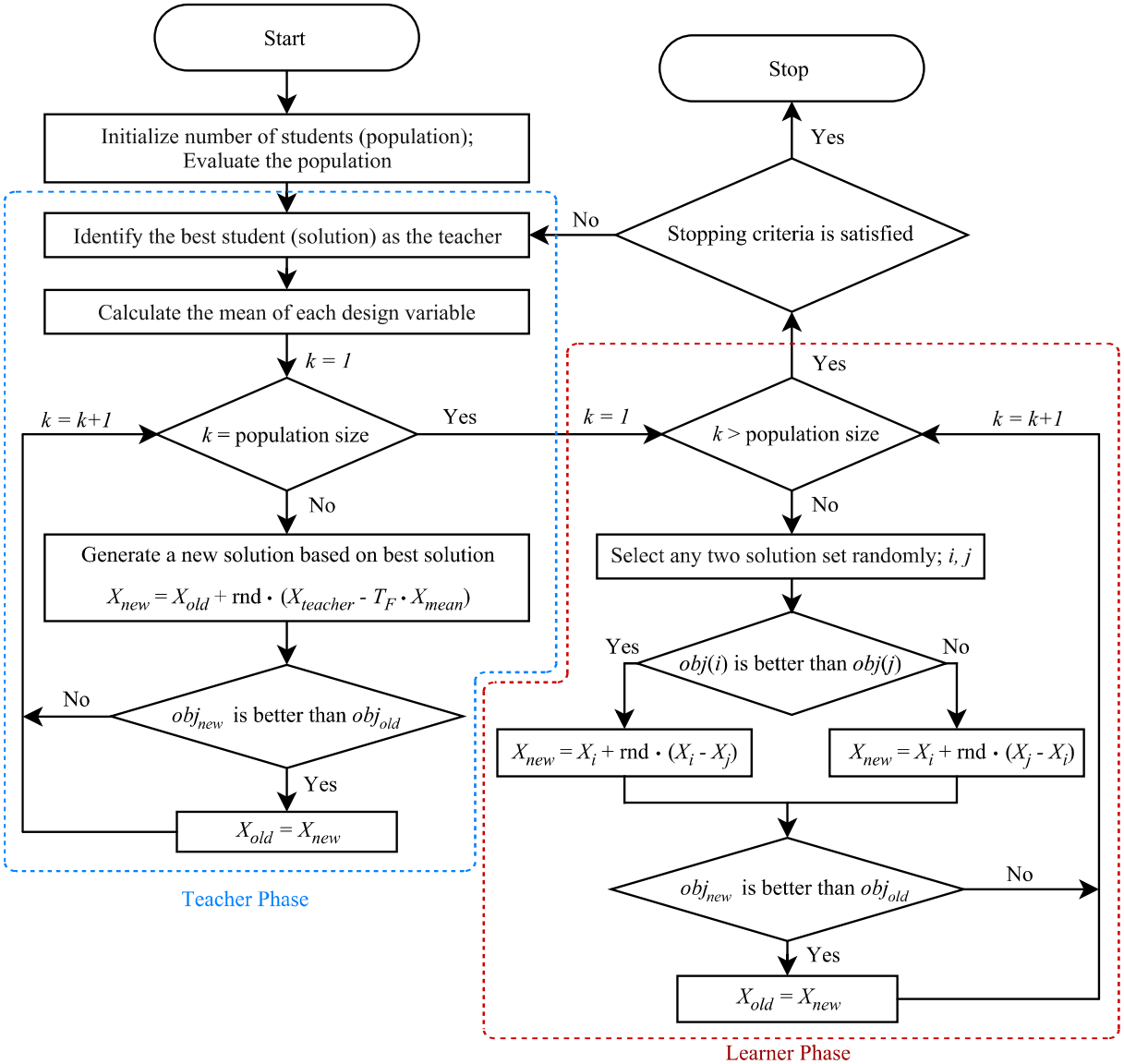

Fig 3. Flowchart of TLBO optimization process

3 Numerical Examples

As numerical example, TLBO algorithm is performed on a retaining wall example and the results are compared with BBBC, PSO and IHS approaches. In the numerical example height of stem is 3 m, yield strength of steel is 400 MPa, compressive strength of concrete is 25 MPa, Elasticity modulus of steel is 200 GPa, specific

gravity of steel and concrete are 7.85 t/m^3 and 23.5 kN/m^3, respectively, unit material costs are 40 \$/m^3 and 400 \$/t for concrete and steel, respectively, backfill slope angle is 10°, internal friction angle is 30°, cohesion of base soil is 125 kPa, safety factors for overturning and sliding is 1.5 and for bearing is 3, range of stem and slab thickness is between 0.2 - 3 m, range of heel and toe projection is between is 0.2 - 10 m, range of all diameter of reinforcement bars is between 16 - 50 mm.

The comparative analyses results for internal friction angle (from 18° to 35°) and surcharge load (0 kN to 50 kN) is given in Figs. 4-7. In figures, both average weight and minimum weight values for retaining wall is presented.

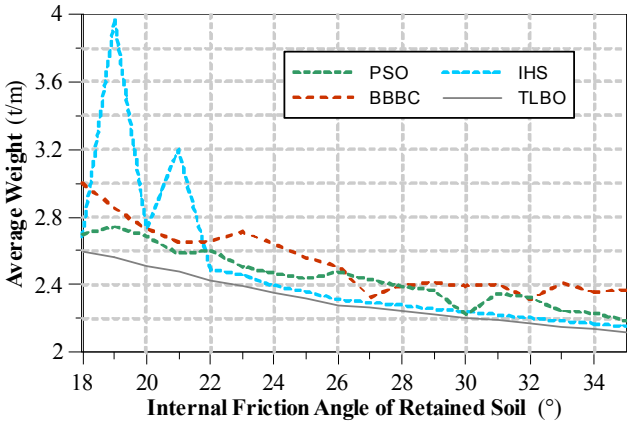

Fig 4. Average weight values vs. internal friction angle plot

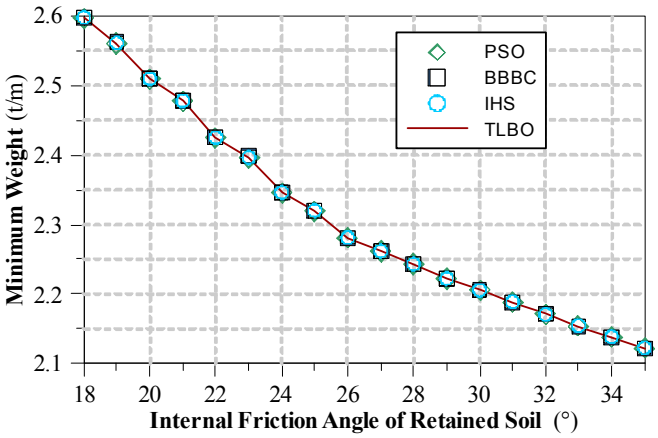

Fig 5. Minimum weight values vs. internal friction angle plot

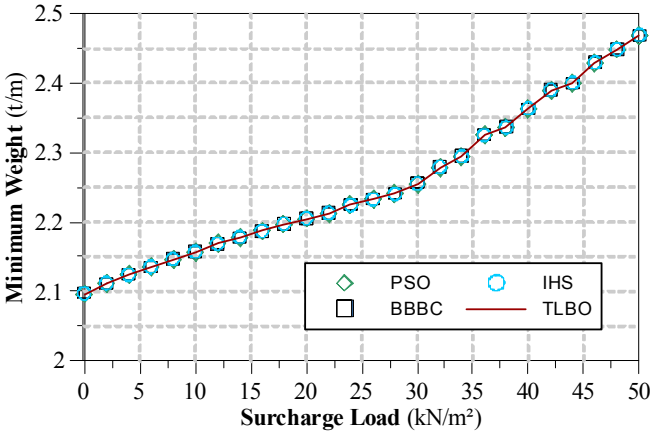

Fig 6. Minimum weight values vs. surcharge load plot

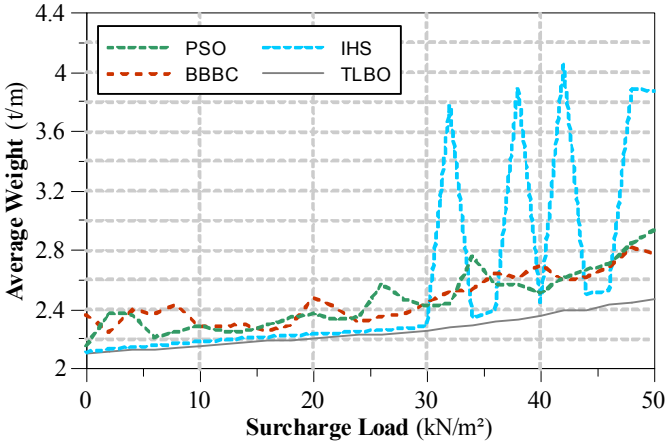

Fig 7. Average weight values vs. surcharge load plot

4 Conclusion

In this paper, optimum design of cantilever RC retaining wall is presented. In order to investigate strengths and weaknesses of the proposed method analyses results are compared with PSO, BBBC and IHS algorithms.

According to analyses results although approximately the same minimum weight values are obtained for all approaches, the best average weight values are obtained with present approach. Especially, in some analyses of other approaches average weight value is more than two times of minimum weight. This means, robustness of the TLBO algorithm is better than other approaches. The same conclusion can be also observed from Fig. 8 that correspond standard deviation value for 100 independent run given. Consequently, TLBO algorithm seems effective, robust and powerful method for optimum design of cantilever RC retaining walls.

ISBN: 978-1-61804-347-4

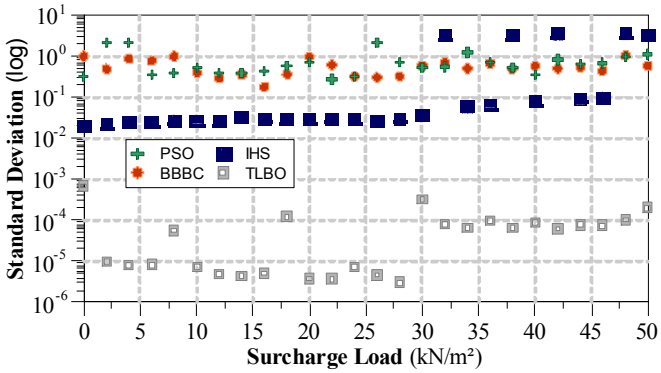

Fig 8. Standard deviation vs. surcharge load plot

References:

[1] Goldberg, D.E. (1989), *Genetic algorithms in search, Optimization and machine learning*, Boston MA: Addison Wesley.

[2] Holland, J.H. (1975), *Adaptation in Natural and Artificial Systems*, Ann Arbor MI: University of Michigan Press.

[3] Kennedy, J. and Eberhart, R.C. (1995), Particle swarm optimization. In: *Proceedings of IEEE International Conference on Neural Networks No. IV*, Perth Australia; November 27 - December 1, p. 1942–1948.

[4] Dorigo, M., Maniezzo, V. and Colorni A (1996), "The ant system: Optimization by a colony of cooperating agents", *IEEE Transactions on Systems Man and Cybernet B*, **26**, 29–41.

[5] Geem, Z.W., Kim, J.H. and Loganathan, G.V. (2001), "A new heuristic optimization algorithm: harmony search", *Simulation*, **76**, 60–68.

[6] Yang, X. S. (2009). Firefly algorithms for multimodal optimization. In*Stochastic algorithms: foundations and applications* (pp. 169-178). Springer Berlin Heidelberg.

[7] Yang, X.-S. (2010), "A New Metaheuristic Bat-Inspired Algorithm, in: Nature Inspired Cooperative Strategies for Optimization (NISCO 2010)", *Studies in Computational Intelligence*, Springer Berlin, 65-74.

[8] Rao, R. V., Savsani, V. J. and Vakharia, D. P. (2011). "Teaching–learning-based optimization: a novel method for constrained mechanical design optimization problems", *Computer-Aided Design*, **43(3)**, 303-315.

[9] Azizipanah-Abarghooee, R., Niknam, T., Roosta, A., Malekpour, A. R. and Zare, M. (2012), "Probabilistic multiobjective wind-thermal economic emission dispatch based on point estimated method", *Energy*, **37**(1), 322-335.

[10] Rao, R. V. and Patel, V. (2013), "Multi-objective optimization of two stage thermoelectric cooler using a modified teaching–learning-based optimization algorithm", *Engineering Applications of Artificial Intelligence*, **26**(1), 430-445.

[11] Rao, R. V. and Waghmare, G. (2015), "Design optimization of robot grippers using teaching-learning-based optimization algorithm", *Advanced Robotics*, **29**(6), 431-447.

[12] Camp, C. V. and Farshchin, M. (2014), "Design of space trusses using modified teaching–learning based optimization", *Engineering Structures*, **62-63**, 87-97.

[13] Ganguly, A. and Patel, S. K. (2014), "A teaching–learning based optimization approach for economic design of X-bar control chart", *Applied Soft Computing*, **24**, 643-653.

[14] Rao, R. V. and Waghmare, G. (2015), "Design optimization of robot grippers using teaching-learning-based optimization algorithm", Advanced Robotics, 29(6), 431-447.

[15] Rao, R. V. and More, K. C. (2015), "Optimal design of the heat pipe using TLBO (teaching–learning-based optimization) algorithm", *Energy*, **80**, 535-544.

[16] Lin, W., Yu, D. Y., Wang, S., Zhang, C., Zhang, S., Tian, H. and Liu, S. (2015), "Multi-objective teaching–learning-based optimization algorithm for reducing carbon emissions and operation time in turning operations", *Engineering Optimization*, **47**(7), 994-1007.

[17] Rhomberg, E. J. and Street, W. M. (1981), "Optimal design of retaining walls", *Journal of the Structural Division*, **107**(5), 992-1002.

[18] Alshawi, F. A. N., Mohammed, A. I. and Farid, B. J. (1988), "Optimum design of tied-back retaining walls", The Structural Engineer, 66(6), 97-105.

[19] Dembicki, E. and Chi, T. (1989), "System analysis in calculation of cantilever retaining walls", International Journal for Numerical and Analytical Methods in Geomechanics, 13(6), 599-610.

[20] Keskar, A. V. and Adidam, S. R. (1989), "Minimum cost design of a cantilever retaining wall", Indian Concrete Journal, 63(8), 401-405.

[21] Pochtman, Y. M., Zhmuro, O. V. and Landa, M. S. (1988), "Design of an optimal retaining wall with anchorage", Soil Mechanics and Foundation Engineering, 25(5), 508-510.

[22] Saribas, A. and Erbatur, F. (1996), "Optimization and sensitivity of retaining structures", Journal of Geotechnical Engineering, 122(8), 649-656.

ISBN: 978-1-61804-347-4

[23] Chau, K. W. and Albermani, F. (2003), "Knowledge-based system on optimum design of liquid retaining structures with genetic algorithms", Journal of Structural Engineering, 129(10), 1312-1321.
[24] Sivakumar Babu, G. L. and Basha, B. M. (2008), "Optimum design of cantilever retaining walls using target reliability approach", International Journal of Geomechanics, 8(4), 240-252.
[25] Ceranic, B., Freyer, C. and Baines, R.W. (2001), "An application of simulated annealing to the optimum design reinforced concrete retaining structure", Computers & Structures, 79(17), 1569-1581.
[26] Yepes, V., Alcala, J., Perea, C. and Gonzalez-Vidosa, F. (2008), "A parametric study of optimum earth-retaining walls by simulated annealing", Engineering Structures, 30, 821–830.
[27] Ahmadi-Nedushan, B. and Varaee, H. (2009), "Optimal Design of Reinforced Concrete Retaining Walls Using a Swarm Intelligence Technique", In The first International Conference on Soft Computing Technology in Civil, Structural and Environmental Engineering, UK.
[28] Kaveh, A. and Abadi, A.S.M. (2011), "Harmony search based algorithms for the optimum cost design of reinforced concrete cantilever retaining walls", International Journal Civil Engineering, 9(1), 1-8.
[29] Camp, C. V. and Akin, A. (2011), "Design of retaining walls using big bang–big crunch optimization", Journal of Structural Engineering, 138(3), 438-448.
[30] Sheikholeslami, R., Khalili, B. G. and Zahrai, S. M. (2014), "Optimum Cost Design of Reinforced Concrete Retaining Walls Using Hybrid Firefly Algorithm", International Journal of Engineering and Technology, 6(6), 465-470.
[31] Talatahari, S. and Sheikholeslami, R. (2014), "Optimum design of gravity and reinforced retaining walls using enhanced charged system search algorithm", KSCE Journal of Civil Engineering, 18(5), 1464-1469.