Case Studies in Construction Materials 19 (2023) e02375

Contents lists available at ScienceDirect

Case Studies in Construction Materials

journal homepage: www.elsevier.com/locate/cscm

Case study

A multidisciplinary analysis of the fire propagation in the aspiration system of a building

Ugur Emre Temelli [a], Ali Serdar Gultek [a], Cengiz Polat Uzunoglu [b], Baris Sayin [c,*]

[a] Vocational School of Technical Sciences, Istanbul University-Cerrahpasa, Turkiye
[b] Department of Electrical and Electronics Engineering, Istanbul University-Cerrahpasa, Turkiye
[c] Department of Civil Engineering, Istanbul University-Cerrahpasa, Turkiye

ARTICLE INFO

Keywords:
Post-fire assessment
Field and building survey
Fire accelerant chemicals
Numerical analysis

ABSTRACT

This paper aims to investigate the potential causes of a fire event that occurred in a fabric finishing facility with washing and drying units. The research methodology employed includes fieldwork, laboratory tests, and numerical analysis to identify potential factors contributing to the fire event. In the first stage, a field study was carried out and investigations were made at the fire site. In the second stage of the study, samples were taken from the fire site and chemical analyses were conducted in a laboratory. In the third stage, computational fluid dynamics (CFD) analyses were performed based on different hypotheses to simulate the fire event. These numerical analyses were conducted using the Fire Dynamics Simulator (FDS) program, an open-source field model developed by the National Institute of Standards and Technology (NIST) of USA. This program has been widely used by researchers in many institutes around the world to simulate different scenarios related to fire phenomena. The data collected in these stages were analyzed to identify the root causes of the fire incident. The multidisciplinary approach presented in this study is expected to make a significant contribution to the literature for determining the causes of similar fire events and strategies for fire prevention.

1. Introduction

In the design process that incorporates considerations of fire effects, it is essential to prioritize the protection of structural stability, strategic planning of emergency exit routes, mitigation of fire propagation, and effective fire response plans. While severe fires in structures and facilities are infrequent and difficult to predict, their occurrence can result in significant damage and loss of life. Hence, adopting a structural fire design approach is crucial in identifying fire causes and minimizing potential risks to human life and property [1].

The existing literature comprises analytical, numerical, and experimental studies examining the impact of fire on buildings and evaluating the fire performance of building materials. For example, Wald et al. [2] conducted tests on insulated products according to standards and fire regulations. The authors investigated the structural response of an eight-story steel building by analyzing the internal forces induced by temperature escalation in different structural elements. Additionally, they examined the behavior of composite plates, beams, columns, and joints under fire conditions. Another study by Al-Jabri [3] focused on investigating the impact of fire on the structural behavior of multi-story steel frame buildings. They found that structural continuity, thermal expansion control

* Corresponding author.
E-mail address: barsayin@iuc.edu.tr (B. Sayin).

https://doi.org/10.1016/j.cscm.2023.e02375
Received 4 June 2023; Received in revised form 9 July 2023; Accepted 3 August 2023
Available online 12 August 2023
2214-5095/© 2023 The Author(s). Published by Elsevier Ltd. This is an open access article under the CC BY-NC-ND license (http://creativecommons.org/licenses/by-nc-nd/4.0/).

provided by adjacent elements, tensile membrane action in joints, and composite sheets had a significant positive impact on the structural response during a fire event. Kwon et al. [4] performed a single-surface fire resistance test on a full-scale plate to analyze the effect of the thermal parameters on the fire resistance performance of concrete. Selamet and Yolacan [5] conducted a fire resistance test on a building using the standard fire curve for the composite slab. The researchers determined the fire resistance duration as 105 min. Furthermore, their findings revealed that the uninsulated elements experienced a strength loss at a temperature of 800 °C. Carlander-Reuterfelt and Flink [6] investigated the structural behavior alterations of a building exposed to fire, utilizing analytical and numerical analyses. Han et al. [7] demonstrated that several factors, such as exposure time to fire, section size, slenderness ratio, and strength of the elements have a substantial influence on the post-fire resistance of structural elements. Ryu et al. [8] performed fire and axial loading tests to analyze the heat and force distributions in walls. The walls were exposed to heat for either one or two hours, following the ISO 834 standard temperature curve. The results of the axial loading tests indicated that the structural behavior of the fire-damaged walls was influenced by certain factors such as the duration of the fire, the strength of the structural element, and the area exposed to heat. Ariyanayagam and Mahendran [9] conducted large-scale fire tests to evaluate the fire performance of different wall configurations. They focused on assessing the performance of wall systems under both standard fire conditions and more realistic fire conditions. Flodr et al. [10] presented a numerical modeling of thin-walled omega clip under temperature and force load. The authors combined two calculations. The coupled analysis was found to be an appropriate method to verify the load bearing capacity in terms of static and heat loads.

The response of a structure to fire and its subsequent behavior depends on the characteristic properties of the materials in the building. Therefore, it is crucial to assess the fire behavior of structural materials, considering their heat transfer properties and mechanical response to heat. During a fire, the internal structure of the material can undergo changes and sustain damage. The extent of this damage can escalate based on the progression and development of the fire. A natural fire typically progresses through four primary stages, as illustrated in Fig. 1. The initial stage is the incipient stage, characterized by the onset of heating and the emergence of potential fuel sources. The second stage is the growth stage, which involves ignition and the visible presence of burning flames. As the fire grows and reaches high temperatures, such as 600 °C, it enters the fully developed stage, indicating the beginning of the third stage known as burning. During this stage, the temperature and heat flux significantly increase, leading to the combustion of exposed surfaces. The rate of heat release is primarily influenced by the available ventilation. The burning stage is typically the most critical phase of the fire, causing the most substantial impact on the structure. In the last stage called decay, the remaining fuel at the fire site diminishes, resulting in a deceleration of the fire. The decay stage starts when approximately 70% of the fuel present at the site has been consumed.

In order to implement proactive measures against potential fire incidents or investigate the causes of a fire that has already taken place, it is crucial to determine potential fire scenario(s). While selecting an appropriate fire scenario, various factors including boundary conditions, material properties, the presence of openings such as windows, and the availability of fire protection equipment should be considered. The total thermal energy released from the combustion of combustible materials within a building, as well as the heat release rate, are crucial parameters for calculating the fire development curve of specific sections, as determined by the designer. Once the possible fire scenarios have been determined, the design fire can be identified. This process is outlined in the EN 1991–1–2 standard [12]. Each design fire scenario involves the examination of a design fire within a fire compartment. Based on the design fire, two approaches are employed; i. Conducting a temperature analysis of the structural elements using a designated nominal temperature-time curve for a specified time period without any cooling step, ii. Performing a temperature analysis of the structural elements for the entire duration of the fire, including the cooling stage, using a specific natural fire model. A summary of these two fire design procedures in accordance with the relevant standard is illustrated in Fig. 2.

In the case of electrical fires, the presence of an electrical arc within the electrical grid is essential. An electric arc is the discharge of electric current between two points, commonly referred to as a short-circuit, which occurs due to a potential difference caused by various factors [13]. Electrical fires can escalate rapidly and generate extremely high temperatures due to the existence of electrical arcs. It is important to investigate whether the fire originated from an arc as these arcs can generate high temperatures. In certain situations, additional fires can be initiated due to a melted wire during an initial fire, leading to a short-circuit and the subsequent

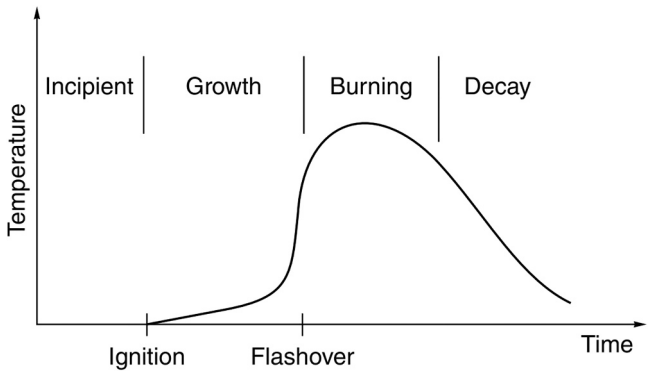

Fig. 1. Time–temperature curve for the whole process of fire development [11].

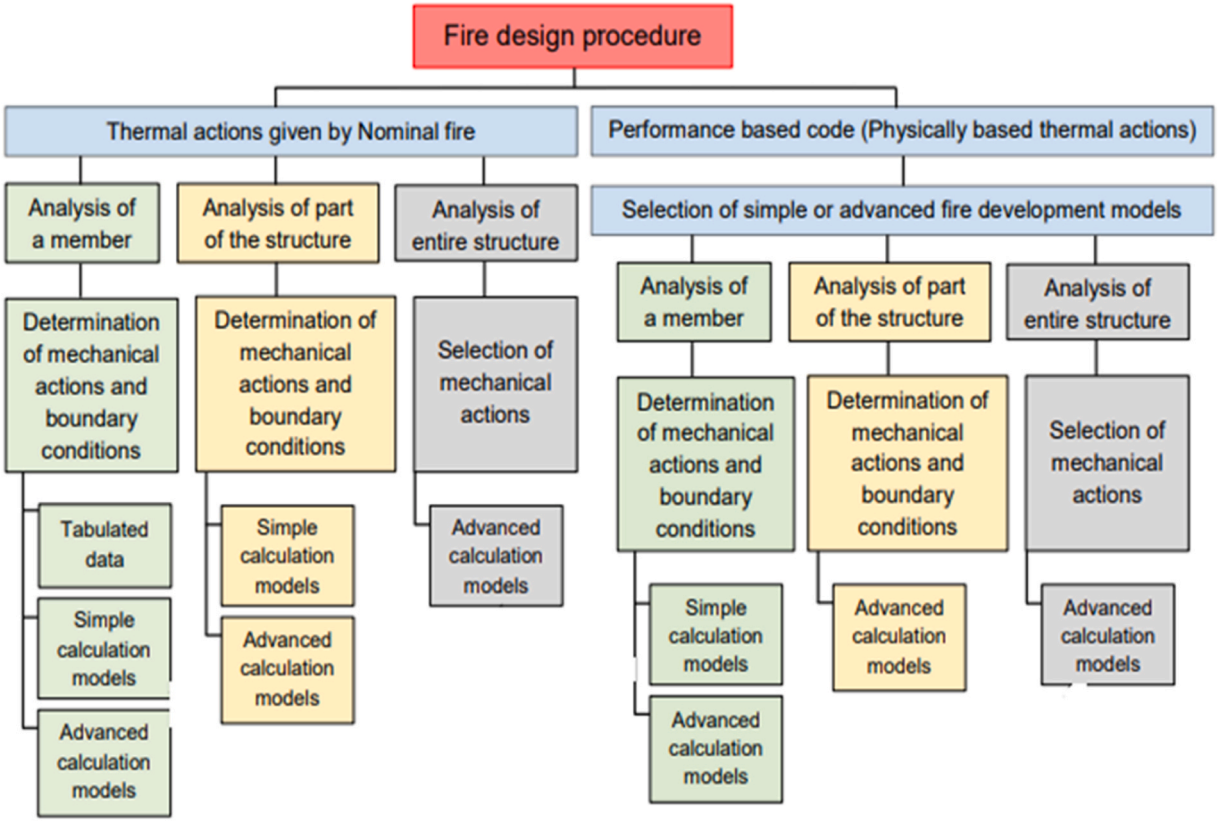

Fig. 2. Design procedure for fire [12].

formation of an electrical arc.

Many studies have been conducted to investigate structural fires, with a primary focus on the following aspects: i) Determining the cause of the fire, ii) Examining the impact of energy released during the fire on the structure, iii) Understanding the distribution of flame, heat, and toxic gases released during the fire. Various methods, particularly numerical analysis, are employed in these studies. Muller et al. [14] utilized a fire-department report on a fire incident in a nursing home to construct an event-time stream. They developed multiple scenarios based on the physical evidence found at the fire site. These scenarios were then transformed into mathematical models using the Petri-net approach to evaluate their consistency with the observed situation at the site. The study focused on modeling the heat energy released during the fire, the propagation of smoke between sections, and the evacuation process. Ada et al. [15] examined the color changes in concrete as an indicator of the impact of increasing heat on load-bearing elements after a fire incident. To measure and analyze the color variations in the concrete, they employed a spectrometer. Additionally, the researchers also conducted compression tests to evaluate the effect of heat on the concrete. By comparing the results obtained from both methods, the researchers aimed to gain insights into the structural behavior of concrete under elevated temperature conditions. Delemont and Martin [16] compared the representation of fire models used in forensic investigations conducted after building fires. Their aim was to identify which of these models accurately reflect the actual fire situation. The researchers discovered that, due to several factors such as analytic simplifications, assumptions regarding boundary conditions, and limitations of the software, fire models are unable to fully replicate real-world scenarios. Their findings highlighted the importance of considering these factors when analyzing fire models, as they can influence the accuracy and reliability of the results.

Simcox et al. [17] reviewed the results of computer simulations conducted during the investigation conducted into the King's Cross metro station fire (1997, UK). The authors stated that there are many strengths of field modeling. The most important one is the reduction in the number of assumptions required to understand the fire dynamics. Jahn et al. [18] analyzed data obtained from a fire test conducted on a house model created to represent realistic conditions and actual dimensions. The researchers collected high-resolution data from multiple measurement points and utilized the Fire Dynamics Simulator (FDS) program for numerical analysis. They observed that the data collected in close proximity to the fire exhibited greater variability compared to areas relatively distant from the fire. These findings provided valuable insights into the limitations of numerical modeling in forensic investigations conducted following a fire incident. Rein et al. [19] analyzed physical data collected from single-story buildings after a fire incident. The researchers employed three different modeling methods: a simplified analytical model, a zone model that divided the fire environment into a hot layer and a cold layer, and a complex FDS field model that incorporated computational fluid dynamics. The results obtained from all three methods exhibited similar outcomes in terms of the initial situation. The authors found that the simple

analytical model can be utilized to assess the accuracy of more complex models. Gorbett [20] compared computational fire models for fire investigations. The input data necessary for fire modeling, existing educational opportunities, and practices related to fire dynamic analysis were analyzed. Additionally, the study explored the application of computational fire models in verifying or disproving proposed hypotheses through the comparison of fire patterns. Gutiérrez-Montes et al. [21] conducted a study to assess the effectiveness of the Fire Dynamics Simulator (FDS) in designing smoke evacuation systems for large enclosed spaces. The researchers found that when utilized appropriately, FDS can serve as a practical tool for the performance-based design of smoke evacuation systems in these types of spaces. Yang et al. [22] focused on the low repeatability of fire events due to their inherently unstable nature. However, the authors highlighted the importance of computer simulation in recreating fire incidents for investigative purposes. They argued that advancements in computers and computational fluid dynamics (CFD) devices have transformed computer simulation into a crucial tool in understanding and analyzing fire incident. Yuen et al. [23] examined the accuracy of the experimental tests conducted on a model built using FDS simulations to find the source of fire. Lee et al. [24] conducted a series of experiments to investigate the interaction between duct fires and ventilation flow. Their study provided valuable data that later researchers utilized in their own work. Floyd et al. [25] proposed a network fire model specifically designed for simulating fire growth and smoke propagation in multiple compartments with complex ventilation systems. Wahlqvist and van Hees [26] conducted a series of experiments to validate the sub models of FDS specifically for large-scale well-confined mechanically ventilated fire scenarios. Their focus was on predicting the behavior of ventilation systems in such scenarios. Overholt et al. [27] compared experimental data to validate soot deposition predictions of FDS in ventilation ducts. Maragkos et al. [28] compared different designs of smoke extraction system ducts and assessed the sensitivity of predictions calculated using Fire Dynamics Simulator (FDS) simulation.

While many studies have explored the fire performance of structures, only a limited number of them have specifically focused on identifying the influential factors that contribute to fire occurrences using a multidisciplinary approach. Therefore, the current study adopts a multidisciplinary approach, which comprises three distinct stages, namely, a field survey, laboratory tests, and numerical analyses. During the initial stage, researchers from various engineering disciplines (civil engineering, mechanical engineering, electrical engineering, and chemical engineering) conducted investigations at the fire scene to collect data and evidence. The electric motor, which the owner claimed to be the source of the fire, was disassembled in the laboratory and thoroughly examined. However, no evidence of fire starters or ignition sources was found in the electric motor.

The discovery of unexpected soot traces in the aspiration duct raised suspicions from a forensic science perspective, suggesting the possibility that the incident might not have been an accidental fire. In the second stage, samples were collected from the fire scene, and chemical analyses were carried out in the laboratory. However, no traces of suspected chemical accelerants were found in the samples.

Finally, computational fluid dynamics (CFD) analysis was conducted for the primary aspiration system to simulate fire propagation. Numerical analyses were conducted to evaluate two hypotheses based on the statements of company officials and the fire department report. According to the given statements, the aspiration system on the machines was reported to be operational during the fire, which resulted in the accelerated propagation of the fire to the nearby machine. This claim was analyzed as the primary hypothesis. Considering the operation of the aspiration system, two hypotheses were analyzed based on the statement that the fire propagated downward through the vertical exhaust ducts of Type 2 and Type 3 drying units, which were connected to the aspiration duct.

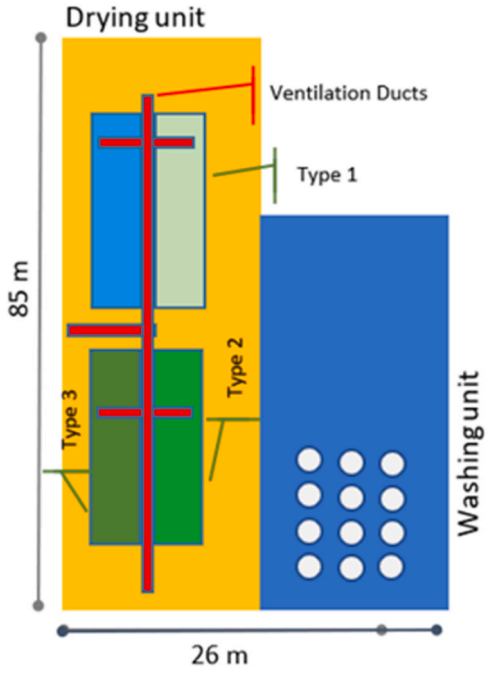

Fig. 3. The plan of the facility.

2. Field examination

The plan of the facility is given in Fig. 3. The facility under examination is a single-story building with a story height of 5 m. Along the north side of the facility, there is a 12-meter-wide area dedicated for the drying units. In other sections of the facility, there are boilers and tanks used for chemical treatment operations conducted on the customers' fabrics.

The occurrence and behavior of a fire in an enclosed space are influenced by various factors, including the amount of fuel and ventilation conditions. In order to gain insights into the fire event, various technical analyses are conducted. These analyses encompassed fire dynamics, safety assessment of the electric network, and chemical analysis of combustible and flammable materials. The fire incident took place in the drying section of the fabric finishing facility. This particular section comprises fabric supply, drying, cutting, and hood units. Since different lengths of drying lines are required for fabrics with different properties, three separate lines are used in the facility corresponding to different fabric properties. These lines are defined as Type 1, Type 2, and Type 3. Based on the statements of company officials, the incident report from the fire department, and visual evidence observed within the facility, a hypothesis has been formulated that the ignition took place in the scrap collection section of the facility. During the examination of the site, fire soot was detected on the louvers situated at the distant end of the main aspiration duct. This observation prompted the analysis of two hypotheses, all of which assumed that the aspiration system was operational during the incident. The first hypothesis was based on the assumption that the fire originated from the scrap collection section and advanced through the hood located at the exit of the drying oven in the Type 1 line. Subsequently, the fire propagated to the air intake duct with a diameter of 300 mm. The flames and smoke were drawn into the duct, aided by the presence of accumulated finished fabric scraps, fabric yarn, non-flammable outdoor dust, and water vapor, which contributed to the fire's progression. The ignited layer of accumulated materials reached a horizontal line (extended for 60 m parallel to the ground) located 4.5 m above the ground. From there, the flames advanced along the 32-meter-long air intake duct. The air inlet duct consists of two sections: an 18-meter segment with a diameter of 300 mm and a subsequent 14-meter segment with a diameter of 400 mm. Eventually, the flames reached the hood connections of the Type 2 and Type 3 lines.

According to the second hypothesis, the fire progressed downwards by 2 m perpendicular to the floor. Subsequently, the flames exited from the suction shaft of the hood in a downward direction and entered the drying unit through the outlets of the Type 2 and Type 3 lines. Based on the statements provided by company officials, there was no fabric present in the drying units of the Type 1, Type 2, and Type 3 lines during the fire incident. However, the air suction fans were operational at the time of the fire, the drying units were in a hot state but in the process of cooling down, and a fire occurred within the drying units, the air suction fan compartment, and the connected ducts as a result of the ignition of the accumulated residue of fabric.

The examinations conducted at the fire site revealed that the fire originated in the section where the fabric scraps are suctioned at the exit of the fabric-cutting machine. Fig. 4a provides a visual representation of the specific area where the fire began. At the outlet of the cutting machine, there are two symmetrically placed identical motors that are used for suctioning the fabric scrap pieces. Although the fire originated near one of the motors, the other motor (as shown in Fig. 4b) exhibited no signs of damage or combustion. The electric motor in question is a three-phase alternating current motor with a power rating of 2 kW and a nominal current of 10 A. It should be noted that the nominal current of 10 A is not considered excessive for the electrical network. The nameplate of the motor is shown in Fig. 5.

Fig. 6a illustrates the burnt windings of the motor at the initial point of the fire. However, upon examining the symmetrical motor and inspecting the fuses and cables connected to it, it was determined that the fire was not caused by any electrical network issues. Fig. 6b displays the cover of the motor and the winding block at the initial point of the fire. As seen in this figure, no damage was observed on the cover. If an electrical arc had formed in the windings, it would likely have left visible effects on the cover. The absence of any deformations suggests that the fire did not originate from an electrical arc within the motor winding. A thorough examination of the entire electrical installation revealed no evidence of a grid-induced increase in the current. Additionally, no deformations were observed in the supply cables connected to the motor. Furthermore, the electrical panels and fuses were found to be intact. Fig. 6c shows the supply cable connected to the fire-damaged motor. Only a fire-induced deformation was observed in the cable but no deformation was observed at the inlet of the motor.



Fig. 4. (a) Starting point of the fire, (b) Intact motor unit in the symmetrical position.

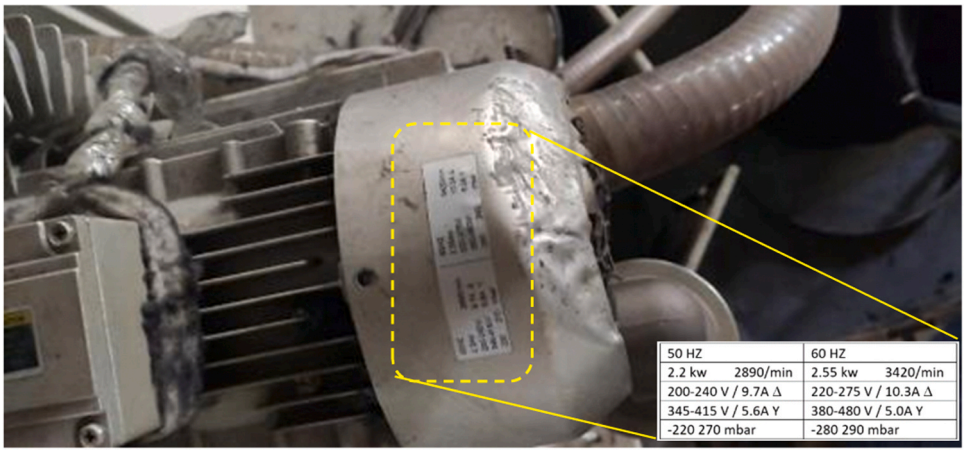

Fig. 5. Nameplate of the motor.

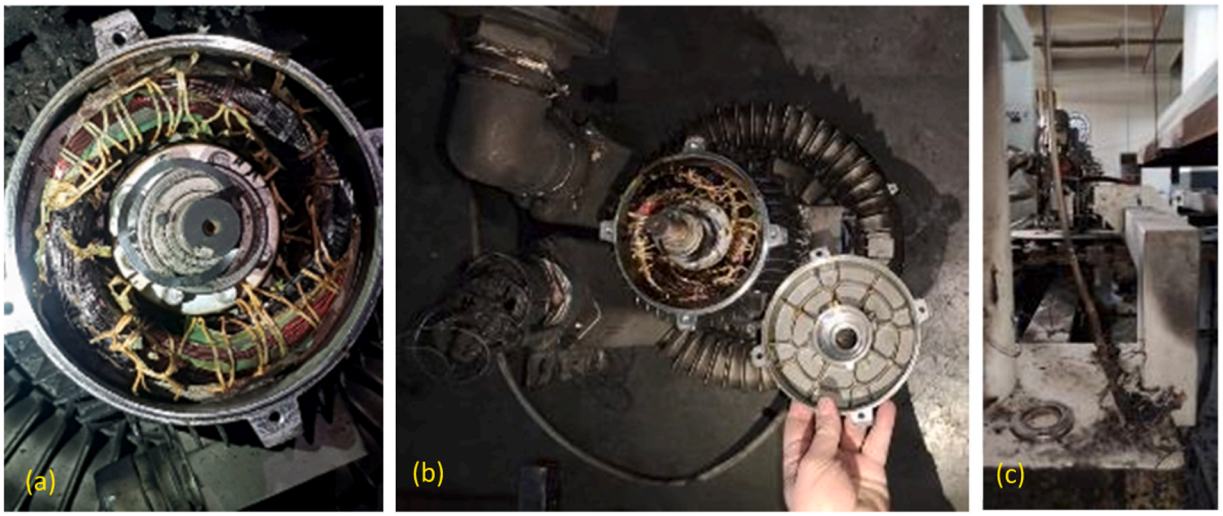

Fig. 6. (a) Fire-damaged motor, (b) The cover of the winding block, (c) Supply cable of the motor.

During the site inspections, burn marks were observed on the motor windings. However, the absence of burn marks in the symmetrical motor and the condition of the fuses and cables connected to this motor suggests that the burn was not caused by a fault in the electrical grid. Therefore, it is hypothesized that the fire might be caused by a liquid or similar substance(s) present between the windings. Furthermore, despite the expectation that flames inside the motor would leave marks on the cover of the winding block, no traces of flames were found. Therefore, no evidence was found regarding a fire originated inside the motor itself. If a fire had occurred in the motor or if the particles on the ground had ignited, visible signs would likely be present around the motor and cables. However, no such signs were observed. Based on these observations and examinations, it can be concluded that the fire did not originate from an electrical issue. Rather, it is likely that oily particles or melted secondary materials damaged the insulation between the windings, leading to the burning of the windings. The fact that the hose used for sucking up fabric particles on the ground at the fire site was burnt, while the exterior of the motor remained undamaged, supports this hypothesis. It is possible that the burning particles being sucked into the hose entered inside the motor and affected the windings.

FM Global Property Loss Prevention Data Sheets 7–1: Fire Protection for Textile Mills [29] describes the fire hazards and necessary protection recommendations for various textile processes involving both natural and synthetic fibers and fabrics. Fire protection measures for finishing and drying operations are defined in this document. The requirements for construction and maintenance of aspiration ducts as means of fire protection are also defined in this document. During the inspection, it was discovered that the facility did not have a fire detection and alarm system, nor a smoke exhaust system in place. However, the facility did have an indoor hose system for initial response and a sprinkler system installed throughout the premises. Additionally, there was a water tank located outside the facility with a capacity of 120 m^3. Two electric pumps were available to transfer water to the installation, providing a pressure of 900 kPa and a flow rate of 50 m^3/hour. Unfortunately, due to the absence of a test line in the installation, it was not possible to determine the operational status of the pumps, whether there was water in the tank, or if the sprinkler system would function

properly in the event of a fire. When the inspectors requested to start the pump, the responsible employee for the fire extinguishing installation refused, stating that the pump was not operational due to pipe connection leaks.

There are three metal hoods connected to the top outlet of the drying units of the Type 1, Type 2, and Type 3 lines. These hoods have dimensions of 3600 mm in length, 1200 mm in depth, and 400 mm in height. The hot air, gas, and dust mixtures generated in the drying units are conveyed to the air intake duct by pipes with 250 mm and 300 mm diameters. To mitigate unpleasant odors, gases, and steam in the environment, vent openings were installed in the air intake duct at a height of 4.5 m from the floor.

The fan unit located at the end of the installation does not have specific pressure and flow values indicated. However, it was determined during the examination that the installation has the capacity to draw in 30,000 m^3 of air per hour. The fan is driven by an electric motor with a power rating of 18 kW. As illustrated in Fig. 7, the air intake system draws ambient air from both directions and conveys it through the duct. The air is then exhausted out through the fan, which is positioned near the center of the installation. Visual evidence from the vents located at both ends of the installation, as shown in Fig. 8, indicated that the fire occurred along the duct line.

3. Laboratory tests

A total of 13 samples were taken from various parts of the facility [30]. The places of the samples are listed in Table 1 and shown in Fig. 9.

Fire initiator/accelerator analysis was performed on 13 samples using a Gas Chromatography-Mass Spectrometer (GC-MS) system to detect the presence of 29 accelerants listed in Table 2. However, none of these accelerants were detected in the examined samples. Due to their volatile nature, fire initiator/accelerant substances can evaporate completely during a fire. Additionally, there was a time gap between the fire event and the collection of the samples, which may result in the evaporation of these substances. Therefore, the absence of detected accelerants in the samples could be attributed to the time gap and the volatilization of these substances from the fire site.

4. Numerical modeling

A comprehensive modeling study was conducted to identify the causes of the fire. Initial measurements were taken at the facility, and a three-dimensional computer model of the main aspiration duct system, which was suspected to contribute to the propagation of the fire between the machines, was created. Subsequently, the open-source Fire Dynamics Simulator (FDS) program developed by the National Institute of Standards and Technology (NIST) [31] was employed to simulate the fire within the aspiration duct system.

FDS employs numerical techniques to solve the transient conservation equations for mass, momentum, energy, and species in the context of low-Mach number gas flow. The three-dimensional space is divided into small rectangular volumes, assuming uniform gas variables within each volume that change over time. FDS utilizes large eddy simulation (LES) for momentum conservation to account for subgrid turbulence when solving the Navier-Stokes equations. The software employs the mixture fraction model for combustion reactions and considers heat transfer to solid surfaces as well as convection within the fluid. Furthermore, it solves the radiative transport equation for an absorbing/emitting and scattering medium. This approach allows FDS to provide detailed information on the spatial variation and temporal evolution of fire parameters, providing visual insights into the complex development of fires. However, there are some limitations to be aware of. The validation of transport equations is necessary for specific scenarios, and FDS has primarily been validated for flows in simple cylindrical geometries such as vehicle tunnel fires and cable galleries. The use of the mixture fraction model may result in an excess of pyrolyzed gases available for combustion. When configuring the FDS model, the size of the

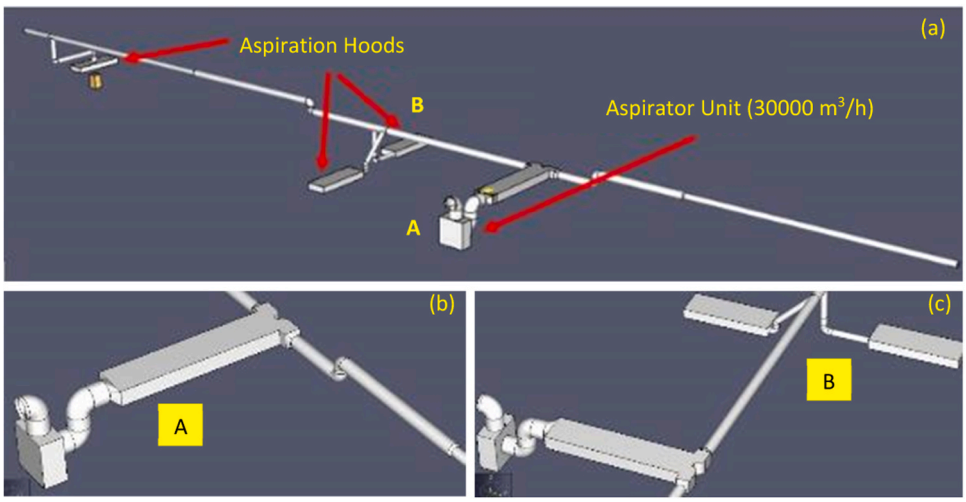

Fig. 7. (a) Diagram of the air intake system, (b) Connections between the suction fan unit and the ducts extend in opposite directions (c) Connections between the suction fan unit and hoods in Type 2 and Type 3 lines.



Fig. 8. The farthest outlet at the northeast façade, in the opposite direction of the origin of the fire.

Table 1
The places of the samples.

No	Sample location	No	Sample location
1	Distant from the scrap box	8	Inside of the Type 2 machine
2	Aspiration duct-fiber	9	The motor mentioned in the fire department report
3	Liquid sample	10	Aspirator (fan) chimney outlet
4	Bottom of the scrap box	11	Middle section of the aspiration duct
5	Motor pipe	12	End of the aspiration line
6	Machine Type 2 RAM – Burned from ground_1	13	Inside of the scrap box
7	Machine Type 2 RAM– Burned from ground_2		

grid volumes is an important consideration. Smaller volumes can potentially improve the accuracy of field models, but this results in increased computational time. Typically, the size of the smallest achievable volume is limited by the available computational resources.

FDS has proven to be a reliable computational tool that greatly supports forensic investigations in a non-destructive, cost-effective, and time-efficient manner. Through numerical simulations, FDS can provide valuable additional information, including details about flow structure and concentrations of chemical species. This enhances the understanding of fire-related evidence, such as the origin of the fire and its development within a compartment. FDS can successfully model fire propagation and flashover, further improving its effectiveness. Additionally, FDS can be utilized to establish a timeline of events, such as sprinkler activation or flame detector triggering, aiding in the comprehensive understanding of fire incidents and their consequences. Overall, FDS plays a vital role in facilitating fire investigations by providing valuable insights and supporting evidence analysis.

During the preparation of the numerical model, the authors followed the procedures outlined in ASTM E1355–04 - Standard Guide for Evaluating the Predictive Capability of Deterministic Fire Models [32] and ISO 16730–1:2015 - Fire Safety Engineering — Procedures and Requirements for Verification and Validation of Calculation Methods [33].

In order to reduce computation time for CFD analysis, instead of using a single mesh for the atmospheric environment, the duct installation model and its surrounding medium were designed as two separate zones. For this purpose, the model was divided into 42 separate meshes. A preliminary analysis was performed to determine the appropriate cell sizes for the meshes. Accordingly, Eq. (1) was used to estimate the characteristic diameter of the fire [34]:

$$D^* = \left(\frac{Q}{\rho C_p T_o \sqrt{g}}\right)^{\frac{2}{5}} \tag{1}$$

In this equation, ρ_0, Cp, T_0 are ambient air properties, Q is the heat release rate (kW), and g is the gravitational acceleration (m/s^2). In the previous studies, the selected mesh unit cell size typically varied between 0.1D* to 0.12D* . Additionally, it was reported that a mesh cell size smaller than 0.075D* does not change the results [35]. Based on preliminary experiments, it was determined that consistent results could be achieved by dividing the unit cell size for the mesh area surrounding the domain defined for the drying units and aspiration duct system into 203.924 cells with varying sizes ranging from 0.125 to 0.5 m. Therefore, an analysis with high resolution was conducted using a total of 203.924 cells.

The simulation duration was set to 1200 s (20 min), which corresponds to the time when the fire was controlled by the fire brigade. The heat release rate for the burner surfaces was defined as 2.0 kW/m^2 and the total area of the burner surface was 0.84 m^2.

It was claimed that the main element causing the propagation of the fire was the operation of the aspiration system. Fig. 10 illustrates the scheme of the aspiration system, which consists of two channels aspirating in opposite directions. These channels converge at the midpoint (point C). And the fan motor connected to the system is located at point D, where it exhausts the dirty air into the atmosphere. During the field examination, the presence of soot was detected at the vent (point B), which is located at the farthest point in the opposite direction from the alleged starting point of the fire (point A). This finding, the presence of soot at this point, contradicts the possibility of an accidental fire and raises doubts among the authors.



Fig. 9. Locations of the samples collected from the facility.

Two hypotheses were developed following the methodology described by Delémont and Martin. [16] to investigate the operation of the existing aspiration system. The development steps of the hypotheses are described below:

Step 1: The airflow velocity in the duct was calculated as a dynamic variable that could contribute to the propagation of the fire.

Step 2: Based on the airflow velocity obtained in the first step, the flow of smoke along the duct was examined (Hypothesis 1).

Step 3: Based on the airflow velocity obtained in the first step, it was determined whether the fire propagated in the direction of gravity in the ducts connected to Type 2 and Type 3 machines (Hypothesis 2).

Table 2
Fire initiators/accelerators examined in the analysis.

No	Material	No	Material	No	Material
1	2-Methylheptane	11	2,3-Dimethylnaphthalene	21	o-Ethyltoluene
2	m,p-Ethyltoluene	12	1-Ethyl-3-Methylcyclohexane	22	1,2,4-Trimethylbenzene
3	1,2,3-Trimethylbenzene	13	1,2,4-Trimethylbenzene	23	n-Decane
4	4-Ethyl-m-xylene	14	m-Propyltoluene	24	n-Dodecane
5	Naphthalene	15	Cyclodecane	25	n-Tetradecane
6	Ethylbenzene	16	n-Hexane (C6)	26	n-Hexadecane
7	2-Methylnonane	17	Toluene	27	n-Octadecane
8	Butylcyclohexane	18	n-Octane (C8)	28	n-Eicosane
9	1,2,4,5-Tetramethylbenzene	19	p-Xylene	29	Methylene chloride
10	1-Methylnaphthalene	20	m-Ethyltoluene		

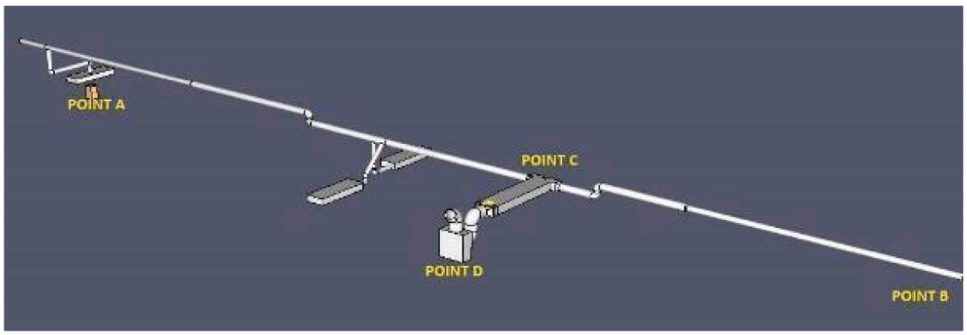

Fig. 10. The locations of the points on the scheme of the aspiration system.

In step 1, the smoke dispersion within the duct was examined using FDS when the fan motor, which removes dust, dirty air, and vapor from the environment, operates at its full capacity with a flow rate of 30,000 m^3/h.

In order to investigate the propagation of the fire to point B, the airflow velocity calculated in the first step was utilized as an input value while testing hypothesis 1. A simulation of the aspiration system was conducted at point B.

The airflow velocity calculated in the first step was also used as an input value while testing hypothesis 2. A simulation was conducted to investigate the hypothetical downward propagation of smoke and flames in the duct connections of the Type 2 and Type 3 machines.

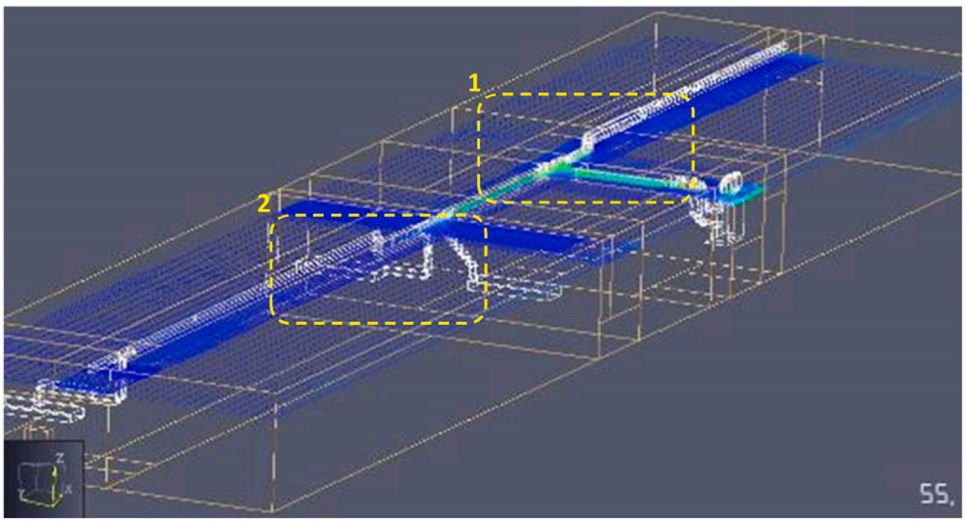

Fig. 11. Airflow velocity analysis across the entire duct (h=4.5 m).

4.1. Analysis of hypothesis 1

During the CFD analysis, it was assumed that the aspiration duct system operates with a capacity of 30.000 m^3/hour, drawing ambient air from the vent openings and exhausting it outside. Based on the analysis results, it was observed that there is a flow of polluted air from both the northeast end and southwest ends of the duct towards the middle section when the suction system is in operation (Fig. 11).

Fig. 12a and b show the duct and the airflow within the duct, respectively. The airflow from both directions can be observed in the suction fan section.

Based on the analysis results, it was determined that the airflow within the aspiration duct is directed from the floor to the ceiling. The airflow velocity within the duct was calculated as 10.8 km/h (3 m/s). This velocity is comparable to the wind speed that begins to disturb one in the open air. Under normal conditions, it is unlikely for smoke, sparks, or burning fabric fibers to propagate toward point B in the duct with a reverse flow rate of 10.8 km/h.

4.2. Analysis of hypothesis 2

On the opposite side of the assumed location of the fire origin, the openings on the northeast facade (Point B) that have burning signs were examined, and samples were collected from the interior.

A detailed analysis of the burned samples collected from the aspiration duct revealed the presence of a thin layer composed of a mixture of partially dry and partially wet materials. This thin layer consisted of finished fabric scraps, finished yarn, non-combustible outdoor dust, and water vapor in the ambient air. A literature survey was conducted to gather more insights into these findings. Vyhlidalova et al. [36] examined the correlation between the dust layers accumulated in the ventilation ducts and the airflow. Their study highlighted that a ventilation system is deemed unclean in terms of health if the weight of the dust layer exceeds 1 g/m^2, which means that a 1 m^2 area of the layer contains over 1 g of dust. While this value may not be practical for an unsanitary industrial working

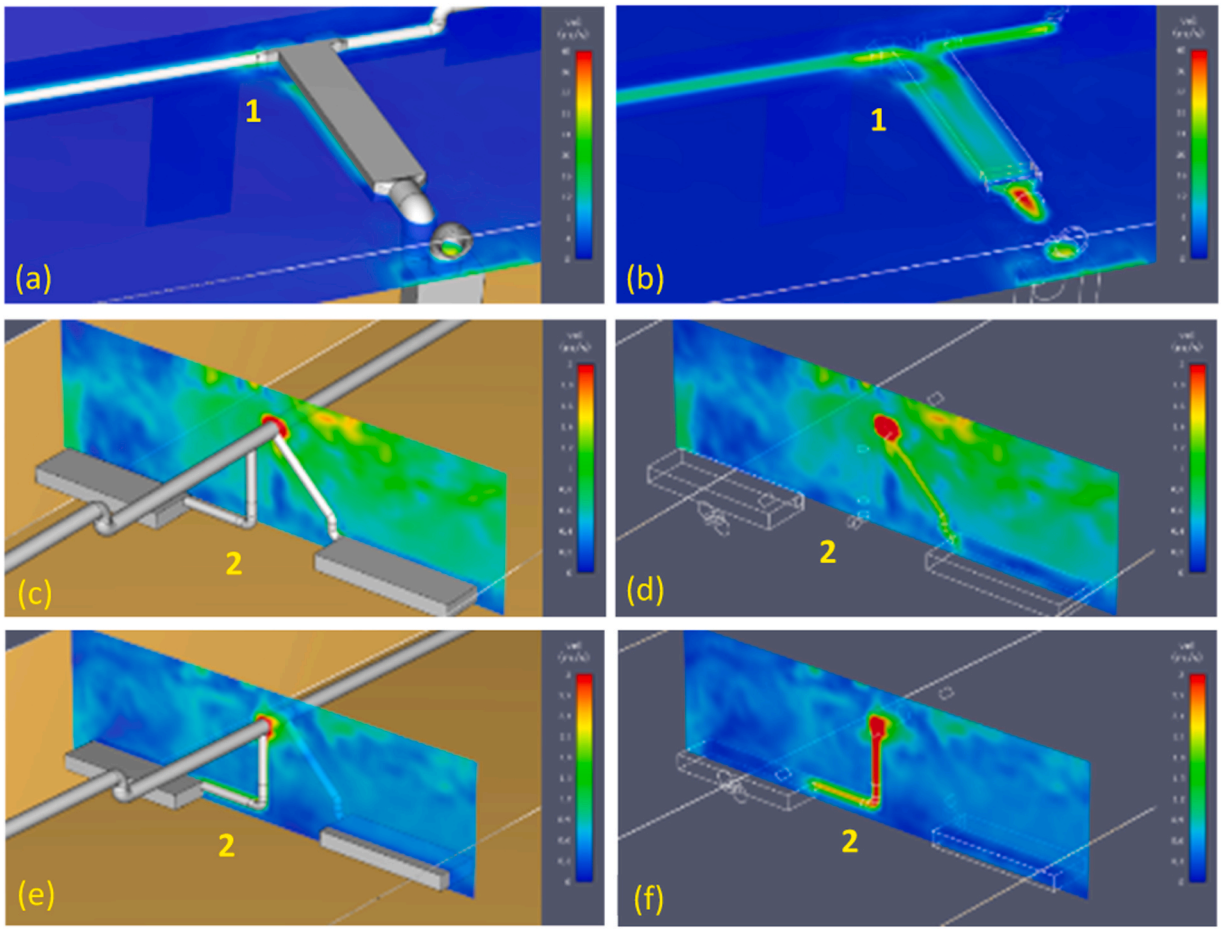

Fig. 12. (a,b) Airflow within the suction fan section, (c,d) Airflow within the hood outlet of the Type 3 machine, (e,f) Airflow within the hood outlet of the Type 2 machine.

environment, it can be considered a reference value in the analysis to determine the lower limit of pollution.

Based on the assumption that the layer accumulated in the aspiration duct is partly dry and partly wet due to washing operations, further calculations were made to estimate the combustible content in the duct. Based on these assumptions, the combustible layer in the duct was calculated to be 20 g/m^2, which is 20 times higher than the reference value. The combustion heat of synthetic yarns such as polyester is approximately 11 kcal/g [37]. Accordingly, 2 kilowatts (2 kW/m^2) of heat would be generated for each square meter of the burned layer. Utilizing a safety factor of 2, 4 kilowatts (4 kW/m^2) of heat generation was defined in the CFD analysis model. While performing a CFD analysis, it is necessary to know the burning rate of the material and the corresponding heat energy released.

Due to the absence of an operational smoke detection system or security cameras during the fire in the facility, obtaining a detailed time-flow chart illustrating the different stages of the fire at different time intervals was not possible. To compensate for this limitation, scientific studies on the combustion behavior of different fabrics, including 100% cotton, 100% polyester, and polyester/cotton blends, were examined. One such study conduct by the Building Research Establishment (BRE) institution in England for the Occupational Health and Safety Administration. Ten different fabric types were subjected to a pilot flame and the flame propagation speed was determined in the horizontal plane [38].

The flame propagation tests were conducted on the fabrics prepared in accordance with the "EN ISO 10528 Textiles commercial laundering procedure for textile fabrics prior to flammability testing" [39] standard in an environment created according to the "Standard 302: Flammability of interior fabrics" by the Federal Motor Vehicle Safety Standard (FMVSS) [40]. The heat release rates mentioned in the referenced report were used to create simulations of the combustible surfaces within the aspiration duct.

According to the results, the horizontal flame propagation speed for tightly woven 100% cotton fabric was determined to be 130 mm per minute. Similarly, for 100% polyester and 35% polyester/65% cotton fabrics, the flame propagation speeds were found to be 170 mm and 175 mm per minute, respectively. Based on these findings, a flame propagation speed of 150 mm/min was used in the analyses.

In the CFD analysis for hypothesis 2, visual representations of the analysis for the hood section in front of Type 2 and Type 3 machines are given in Figs. 12c-12d. The aspiration duct connected to the Type 3 machine hood at a 45° angle to the floor is shown in Fig. 12c. The airflow within the duct is shown in Fig. 12d. Similarly, Fig. 12e illustrates the aspiration duct connected to the Type 2 machine hood at a 45° angle to the floor. The corresponding airflow within this duct according to the same analysis is given in Fig. 12 f.

The literature was examined to understand the movement of ignited particles from the hood duct connection (in downward direction) toward the floor. Razali et al. [41] examined downward flame propagation speed for vertically hung cotton/polyester fabrics ignited from their upper edges. Hirano [42] also conducted a similar study. The ambient temperature required for polymer materials to ignite without flame contact was defined as the pyrolysis temperature. In another study, it was stated that the pyrolysis temperature ranges from 350 °C to 400 °C [43]. Furthermore, it is known that polymer materials, including polyester in various forms such as powder, granules, yarn, or fabric, do not ignite directly upon contact with a flame. Instead, they tend to melt away from the flame and ignite subsequently through heat transfer. During the melting process, the material acquires a sticky consistency, and its downward progression is slowed down by surface tension. Based on these studies, the downward flame propagation speed was considered 1.5 mm/s in the analyses.

Using the CFD analysis, temperature variations within the duct were calculated for the following phases of the fire: the entrance of the flame to the duct of the Type 3 machine's hood, the ignition of the layer inside, and the horizontal propagation of the fire at a speed of 150 mm/min. The thermal conditions within the duct were analyzed for a duration of 20 min (1200 s), corresponding to the time until the fire was brought under control by the fire brigade. The heat generated by the burning material in the duct increased to 15 kW after 1200 s (Fig. 13a). Thermocouple sensors placed in the middle of the channel were used to measure the temperature change on the inner surface, and it was observed that the temperature ranged from 140 °C to 160 °C (Fig. 13b).

It is known that the temperature at the surface will be higher than the temperature of the smoke flowing within the duct with a velocity of 0.6 m/s. This is due to the energy radiated from the flame. In sections of the duct that are exposed to flames, the temperature of the smoke can reach up to 95 °C. A portion of the material in the duct is consumed by the fire. And the temperature of the smoke in areas that are not directly exposed to flames can decrease to 35 °C. The scheme of the air duct is given in Fig. 14a and the temperature change of the smoke propagating within the duct is shown in Fig. 14b.

This study aimed to determine the causes of a fire event that occurred in a fabric finishing facility through field studies, laboratory tests, and numerical analysis. The key findings of the study are listed below.

5. Findings and results

The multi-disciplinary approach conducted on this study enabled performing additional analyses and achieving detailed conclusions as follows:

During the on-site inspection, burn marks were discovered on the winding of a motor. However, no burn marks were observed on the symmetrical motor. Additionally, examinations of the fuses and cables led to the conclusion that the fire was not triggered by an electrical grid issue. The burn marks were likely caused by the entry of liquid or similar materials between the motor windings. An electrical engineer, specialized in this field, conducted an internal examination of the electric motor. Despite the expectation of finding traces of flame ignition inside the cover of the motor's winding block, no evidence of flame was observed on the cover. This indicates that the fire did not originate from within the motor itself. If the fire had started inside the motor causing the ignition of particles on the ground, visible traces of such a flare-up would have been present around the motor and cable. However, no such traces were observed. Considering these observations and examinations, it was concluded that the fire originated from a non-electrical reason. It is likely that oily particles or melting secondary materials compromised the insulation between the windings, leading to the burning of the

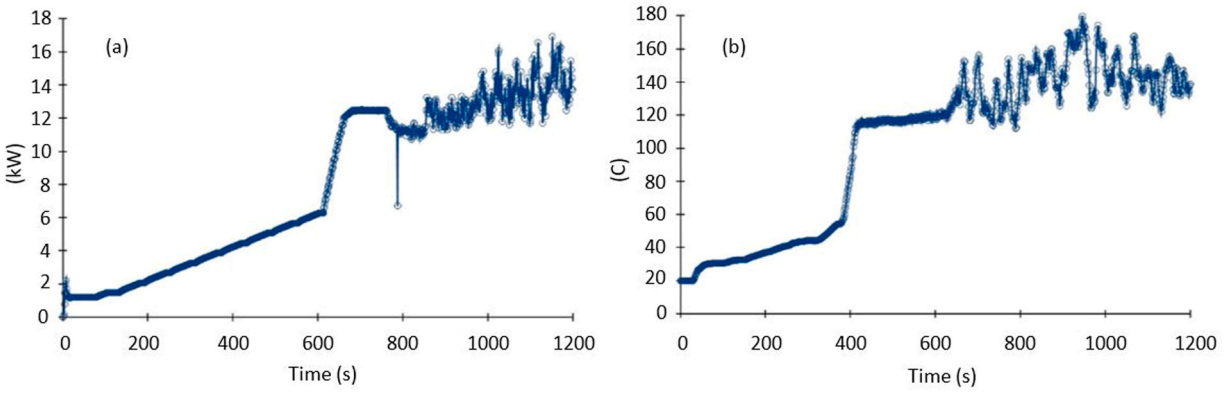

Fig. 13. (a) The heat release rate of the burning material in the duct for 1200 s, (b) The temperature in the inner surface of the duct for 1200 s due to the burning material in the duct.

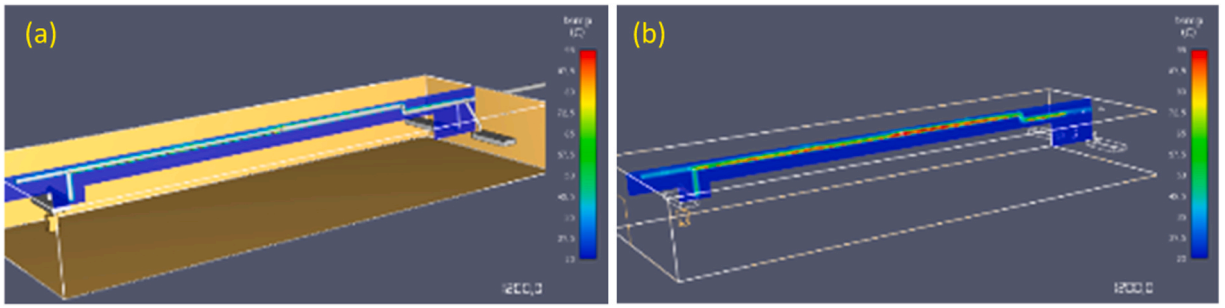

Fig. 14. (a) Air duct, (b) The temperature change of the smoke propagating along the duct.

windings. This hypothesis is supported by the fact that the hose used for suctioning fabric particles on the ground at the fire site was burnt, while the exterior of the motor remained intact. It is believed that burning particles were drawn into the motor through the suction hose and entered between the windings, causing burning of the windings. It was found out that the motor itself was not the ignition source but suffered excessive external damage due to its exposure to the fire.

A forensic chemical engineer examined the marks of soot left by the fire on the walls, ceiling, and structural frame. She also investigated the abnormal color changes on concrete surfaces and steel surfaces which could potentially be attributed to the high temperatures of the fire to determine the presence of chemical fire accelerants. A total of 13 samples were collected from the fire site and analyzed to detect the presence of 29 potential fire initiator or accelerator substance. However, none of these substances were detected in the samples. It is important to note that these fire initiators/accelerants are volatile in nature and can completely evaporate during a fire. Therefore, the absence of these substances in the collected samples does not necessarily indicate that they were never present at the fire site. Furthermore, the time gap of 6 days between the sample collection and the occurrence of the fire introduces further uncertainty in drawing definitive conclusions about the presence of accelerator chemicals. Collection of physical evidence from the incident scene is in the responsibility of responding party. Therefore, a proper analysis to determine the presence of accelerant chemical liquid(s) could only be executed with properly collected and kept samples from the fire scene as emphasized in the industry guidelines [44,45]. It is crucial to do a chemical study promptly following the event.

Based on the examinations of the experts, a fire model was established and numerical analysis was performed to assess the validity of the findings of the fire department's initial investigation.

During the examination conducted at the facility, evidence of burning was discovered in the vent located at the end of the aspiration duct on the northeast facade, which is approximately 60 m away from the initial fire point (Point B, Fig. 10). This finding indicates that the fire propagation along the duct toward this location. However, according to the CFD analysis, the operation of the suction fan creates a strong airflow in the opposite direction to the fire's progression. The calculated flow velocity of the air/gas/smoke mixture in the duct is 10.8 km/h (3 m/s). Consequently, if the suction fan was operational, it is unlikely for smoke or flames to reach this point (Point B, Fig. 10).

Due to the airflow (with a velocity of 3.4 km/h or 0.09 m/s at the hood section) generated by the running suction fan, it is not possible for smoke or flames to travel down the hood ducts of Type 2 and Type 3 machines during the fire.

The heat release rate of the burning material ranges from 12 kW up to 15 kW. The calculations indicated that the temperature of the inner surface of the duct reaches from 140 °C up to 160 °C. Due to energy transfer by heat conduction and convection, the temperature of the smoke layer is lower than the surface temperature. As calculated by the simulation, the temperature of the smoke which had

reacted with the combustible lint cover inside the duct was 95 °C. The temperature of the smoke layer is approximately 200 °C below the melting temperature of ignitable fuel. Therefore, without direct contact with flames, there is insufficient energy to ignite the combustible material present in the duct. Moreover, the analyses demonstrated that even if the polymer-containing material melted and moved away from the flame surface during this process, the flame propagation rate of the material would be extremely slow. This is particularly relevant considering that the material is expected to be present in very small quantities in the duct walls under normal operating conditions, assuming continuous aspiration. Consequently, it was determined that the material cannot reach the machines before the firefighting measures were initiated. Based on the technical analysis and visual findings, it is plausible to consider that the main aspiration system was either not operational during the fire or was stopped at some point after the fire started.

Inside the drying unit of the Type 2 machine, there were noticeable signs of flaming and sooty combustion, indicating that the fire had affected this area. Additionally, traces of sooty burning were found on the exterior of the metal suction fan chamber of the drying unit. While there were fewer traces of burning exterior of the metal suction fan chamber on the Type 3 machine's drying unit, color changes indicative of high-energy combustion were also detected on the outer surface of the metal material, unlike the Type 2 machine. In contrast, no evidence of flaming and sooty combustion was found in the Type 3 drying unit, indicating that this unit was not affected by the fire. To trigger a color change on the surface of the metal material, either a substance with high thermal energy would need to burn inside or a low thermal energy material would need to undergo prolonged combustion. The material that burned inside the duct was a relatively weak mixture with the ability to release approximately 4 kW/m^2 of heat. The fire brigade responded rapidly, about 5–25 min after the fire was reported. So, it is difficult to establish a direct correlation between the intervention time and the amount of fuel burned as a potential cause for the observed color change on this unit.

As a result, it was determined that the fire could not reach the units located 32 m away from the origin of the fire through the aspiration ducts, and therefore, could not cause fire damage to the Type 2 and Type 3 units.

6. Conclusion

Based on the traditional examination methods conducted by the fire department's investigation team, an electric motor was identified as the primary ignition source in their report. According to the visual findings and observations, the fire department's investigators determined that the presence of an operational aspiration system contributed to the propagation of the fire.

If inconsistencies arise between the statements of relevant parties and the data obtained from analyses, as described in the introduction section of our study, it may direct forensic investigation units to conduct a detailed evaluation. Accordingly, this study reveals that a multidisciplinary approach is necessary for the forensic examination of fire incidents.

In addition to mechanical, electrical and chemical forensic analysis of physical evidence, modeling of fires became a powerful tool. Computer fire models are easily accessible with open-source codes in today's world. Open-source field models are allowing researchers from around the world to contribute to validation studies and enhance public safety. However, it is important for forensic scientists to exercise caution when using these tools, considering the potential risk of misuse or misinterpretation of fire models.

Considering the importance of fire investigations, it is necessary to focus on the development of guidelines describing procedures for effectively utilizing fire modeling techniques and developing strategies to validate and integrate the results of fire modeling into forensic fire investigations. Forensic scientists should increase their involvement in fire modeling and improve communication and collaboration with computational fluid dynamics engineers.

Based on the examinations conducted involving various engineering disciplines, the cause and propagation of the fire described in the initial investigation report were found to be inaccurate and misleading. The utilization of a multi-disciplinary approach in investigating building fire incidents would be beneficial for all parties involved.

Declaration of Competing Interest

The authors declare that they have no known competing financial interests or personal relationships that could have appeared to influence the work reported in this paper.

Data availability

No data was used for the research described in the article.

References

[1] Arpacıoglu, Ü. (2004) System installation and material use in protection against the effect of fire in high building systems, 2nd National Building Materials Congress, October 6–8, 2004.
[2] F. Wald, L.S. Da Silva, D.B. Moore, T. Lennon, M. Chladna, A. Santiago, L. Borges, Experimental behaviour of a steel structure under natural fire, Fire Saf. J. 41 (7) (2006) 509–522, https://doi.org/10.1016/j.firesaf.2006.05.006.
[3] K.S. Al-Jabri, Behavior of steel-framed buildings in a fire, Steel Struct. 7 (2007) 227–237.
[4] Y. Kwon, D. Kim, S. Kang, B. Kim, B. Han, J. Lee, H. Kazunori, Fire resistance performance analysis of reinforced concrete members using Galerkin finite element method, Procedia Eng. 62 (2013) 725–735, https://doi.org/10.1016/j.proeng.2013.08.119.
[5] S. Selamet, T.F. Yolacan, Fire resistance testing of a steel-concrete floor slab, Tech J Turkish Chamber, Civ. Eng. 28 (3) (2017) 8007–8022.
[6] F. Carlander-Reuterfelt, F. Flink, Structural integrity of steel structures subjected to fire. A comparison between Eurocode and FE modelling, MSc thesis, Chalmers University of Technology,, Sweden, 2018.

[7] L.H. Han, K. Zhou, Q.H. Tan, T.Y. Song, Performance of steel reinforced concrete columns after exposure to fire: Numerical analysis and application, Eng. Struct. 211 (2020), 110421, https://doi.org/10.1016/j.engstruct.2020.110421.
[8] E. Ryu, H. Kim, Y. Chun, I. Yeo, Y. Shin, Effect of heated areas on thermal response and structural behavior of reinforced concrete walls exposed to fire, Eng. Struct. 207 (2020), 110165, https://doi.org/10.1016/j.engstruct.2020.110165.
[9] A. Ariyanayagam, M. Mahendran, Fire resistance of light gauge steel frame wall systems lined with gypsum plasterboards, Second Int. Conf. Perform. Based Life Cycle Struct. Eng. (2015).
[10] J. Flodr, M. Krejsa, P. Lehner, Temperature and structural analysis of omega clip, Int. J. Steel Struct. 19 (4) (2019) 1295–1301.
[11] A.H. Buchanan, A.K. Abu, Structural Design for Fire Safety, John Wiley & Sons,, 2017.
[12] Eurocode 2. EN 1991–1-2 Actions on Structures-Part 1–2: General Actions - Actions on Structures exposed to Fire, Brussel: European Committee for Standardization.
[13] S. Choi, J.J. Yoh, Fire debris analysis for forensic fire investigation using laser induced breakdown spectroscopy, Spectrochim. Acta Part B: At. Spectrosc. 134 (2017) 75–80, https://doi.org/10.1016/j.sab.2017.06.010.
[14] A. Muller, F. Demouge, M. Jeguirim, P. Fromy, J.P. Vantelon, The use of Petri nets and a two-zone model for fire scene reconstruction, Fire Saf. J. 55 (2013) 139–151, https://doi.org/10.1016/j.firesaf.2012.10.006.
[15] M. Ada, N. Yüzer, Y. Ayvaz, Postfire damage assessment of a RC factory building, J. Perform. Constr. Facil. 33 (5) (2019), 04019047, https://doi.org/10.1061/(ASCE)CF.1943-5509.0001319.
[16] O. Delémont, J.C. Martin, Application of computational fluid dynamics modelling in the process of forensic fire investigation: problems and solutions, Forensic Sci. Int. 167 (2–3) (2007) 127–135, https://doi.org/10.1016/j.forsciint.2006.06.053.
[17] S. Simcox, N.S. Wilkes, I.P. Jones, Computer simulation of the flows of hot gases from the fire at King's Cross underground station, Fire Saf. J. 18 (1) (1992) 49–73, https://doi.org/10.1016/0379-7112(92)90047-G.
[18] W. Jahn, G. Rein, J.L. Torero, A posteriori modelling of the growth phase of Dalmarnock Fire Test One, Build. Environ. 46 (5) (2011) 1065–1073, https://doi.org/10.1016/j.buildenv.2010.11.001.
[19] G. Rein, A. Bar-Ilan, A.C. Fernandez-Pello, N. Alvares, A comparison of three models for the simulation of accidental fires, J. Fire Prot. Eng. 16 (3) (2006) 183–209, https://doi.org/10.1177/1042391506056926.
[20] G.E. Gorbett, Computer fire models for fire investigation and reconstruction, Int. Symp. Fire Investig. Sci. Technol. (2008).
[21] C. Gutiérrez-Montes, E. Sanmiguel-Rojas, A. Viedma, G. Rein, Experimental data and numerical modelling of 1.3 and 2.3MW fires in a 20m cubic atrium, Build. Environ. 44 (9) (2009) 1827–1839, https://doi.org/10.1016/j.buildenv.2008.12.010.
[22] P. Yang, X. Tan, W. Xin, Experimental study and numerical simulation for a storehouse fire accident, 2011, Build. Environ. 46 (7) (2011) 1445–1459, https://doi.org/10.1016/j.buildenv.2011.01.012.
[23] A.C.Y. Yuen, G.H. Yeoh, B. Alexander, M. Cook, Fire scene investigation of an arson fire incident using computational fluid dynamics based fire simulation. Building Simulation 7, Tsinghua University Press,, 2014, pp. 477–487, https://doi.org/10.1007/s12273-014-0164-9.
[24] C.K. Lee, R.F. Chaiken, J.M. Singer, Interaction between duct fires and ventilation flow: an experimental study, Combust. Sci. Technol. 20 (1–2) (1979) 59–72, https://doi.org/10.1080/00102207908946897.
[25] J.E. Floyd, S.P. Hunt, F.W. Williams, P.A. Tatem, A network fire model for the simulation of fire growth and smoke spread in multiple compartments with complex ventilation, J. fire Prot. Eng. 15 (3) (2005) 199–229, https://doi.org/10.1177/1042391505051358.
[26] J. Wahlqvist, P. Van Hees, Validation of FDS for large-scale well-confined mechanically ventilated fire scenarios with emphasis on predicting ventilation system behavior, Fire Saf. J. 62 (2013) 102–114, https://doi.org/10.1016/j.firesaf.2013.07.007.
[27] K.J. Overholt, J.E. Floyd, O.A. Ezekoye, Computational modeling and validation of aerosol deposition in ventilation ducts, Fire Technol. 52 (2016) 149–166, https://doi.org/10.1007/s10694-014-0414-5.
[28] G. Maragkos, K. Van Maele, W. Piontkowski, E. Annerel, B. Merci, Computational analysis of choices in the design of smoke extraction duct systems (SEDS) for compartment fires, Fire Technol. 58 (4) (2022) 2189–2212, https://doi.org/10.1007/s10694-022-01248-9.
[29] FM Global Property Loss Prevention Data Sheets 7–1: Fire Protection For Textile Mills, Factory Mutual Insurance Company, 2020, USA.
[30] S. Mercan, A. Sen Yilmaz, Istanbul University-Cerrahpasa, Institute of Forensic Medicine and Forensic Sciences Fire and Explosives Analysis Laboratory, 2021.
[31] McGrattan, K.B., McDermott, R.J., Weinschenk, C.G., Forney G.P. (2000) Fire Dynamics Simulator User's Guide, NIST Special Publication 1019 Sixth Edition.
[32] ASTM E1355–04, Standard Guide For Evaluating The Predictive Capability Of Deterministic Fire Models, American Society for Testing and Materials, USA.
[33] ISO 16730–1:2015 - Fire safety engineering — Procedures and requirements for verification and validation of calculation methods, 2015, International Organization for Standardization, Switzerland.
[34] C. Hwang, J. Edwards, The critical ventilation velocity in a tunnel cross-passage, J. China Railw. Soc. 30 (2008) 87–90.
[35] A.S. Gultek, Z.D. Bilge, Experimental and numerical investigation oftemperature change during tunnel fires on a model, Sigma J. Eng. Nat. Sci. 35 (3) (2017) 545–556.
[36] K. Vyhlidalova, P. Vlček, O. Rubinová, J. Bernard, Dust analyses in ventilation ducts, in: Applied Mechanics and Materials, Vol. 824, Trans Tech Publications Ltd.,, 2016, pp. 633–640.
[37] T. Grover, A. Khandual, A. Luximon, Fire Prot. Flammabl. Text. Fibres Saf. 1 (2014) 11.
[38] P. Fardell, Tests for the ignition and flame spread of clothing fabrics subjected to angle grinder sparks. Research Report, Health and Safety Executive,, UK, 2014, p. 222.
[39] EN ISO 10528 Textiles commercial laundering procedure for textile fabrics prior to flammability testing, 2002 International Organization for Standardization, Switzerland.
[40] Standard 302: Flammability of interior fabrics, Federal Motor Vehicle Safety Standard (FMVSS), US Federal Register Vol. 36. N0 232, USA.
[41] M.A. Razali, A. Sapit, M.F. Hushim, A. Khalid, S. Masataro, M. Wataru, Flame spread behavior over combined fabric of cotton/polyester, Int. Eng. Res. Innov. Symp. (2015).
[42] Hirano, T. (2001). Flame Spread. In Fire Sci. Technol., Proc. Fifth Asia-Oceania Symp., eds. MA Delichatsios, BZ Dlugogorski, and EM Kennedy (pp. 40–54).
[43] R.N. Walters, S.M. Hackett, R.E. Lyon, Heats of combustion of high temperature polymers, Fire Mater. 24 (5) (2000) 245–252.
[44] ASTM E1618. Standard Guide for Ignitable Liquid Residues in Extracts from Fire Debris Samples by Gas Chromatography–Mass Spectrometry, American Society for Testing and Materials, USA, 2014.
[45] NFPA 921, Guide for Fire and Explosion Investigations, 2021, National Fire Protection Association, Quincy, MA, USA.