

Routledge
Taylor & Francis Group

Journal of Research on Technology in Education

ISSN: 1539-1523 (Print) 1945-0818 (Online) Journal homepage: www.tandfonline.com/journals/ujrt20

Assessing teacher digital competences in pre-service language teachers: Adaptation and validation of the DigCompEdu scale

Cemil Gökhan Karacan & Tuncer Can

To cite this article: Cemil Gökhan Karacan & Tuncer Can (22 May 2025): Assessing teacher digital competences in pre-service language teachers: Adaptation and validation of the DigCompEdu scale, Journal of Research on Technology in Education, DOI: 10.1080/15391523.2025.2504354

To link to this article: https://doi.org/10.1080/15391523.2025.2504354

Published online: 22 May 2025.

Submit your article to this journal

Article views: 54

View related articles

View Crossmark data

Full Terms & Conditions of access and use can be found at
https://www.tandfonline.com/action/journalInformation?journalCode=ujrt20

JOURNAL OF RESEARCH ON TECHNOLOGY IN EDUCATION
https://doi.org/10.1080/15391523.2025.2504354

Routledge
Taylor & Francis Group

Check for updates

Assessing teacher digital competences in pre-service language teachers: Adaptation and validation of the DigCompEdu scale

Cemil Gökhan Karacan[a] and Tuncer Can[b]

[a]İstanbul Beykent University, Istanbul, Turkey; [b]İstanbul University-Cerrahpaşa, Istanbul, Turkey

ABSTRACT

Digital competence for teachers has become a critical necessity today. Although instruments exist for in-service teachers, there remains a gap in tools tailored for digital competence among pre-service teachers. This methodological study aims to adapt and validate the factor structure of a teacher digital competence instrument for pre-service teachers. Following an initial pilot study, data were collected from 448 pre-service English language teachers across two distinct samples. Exploratory factor analysis revealed a two-factor structure—Unified Pedagogic Digital Competence and Professional Engagement and Development—which together explained 52.925% of the total variance. Confirmatory factor analysis subsequently verified this structure, yielding strong model fit indices. This psychometrically sound tool contributes significantly to the field. The findings are relevant for pre-service language teachers, language teacher educators and program developers.

ARTICLE HISTORY
Received 16 February 2025
Accepted 16 April 2025

KEYWORDS
Teacher digital competence; pre-service teachers; DigCompEdu; Unified Pedagogic Digital Competence; Professional Engagement and Development

Introduction

Imagine a teacher's daily practices: conducting in-class digital interactive activities, preparing online forms, collecting student data, managing student engagement through classroom management tools, making online announcements, setting up classroom technology, or creating digital materials and assessments—the examples abound. All of these tasks and more demand a certain level of digital competence. However, initial teacher education programs often fail to effectively equip student teachers with the knowledge, skills, mindset, and opportunities needed to develop teacher digital competence (Gudmundsdottir & Hatlevik, 2018; Tondeur et al., 2012; Uerz et al., 2018). While in-service teachers eventually learn to navigate these responsibilities, it often takes years of experience, numerous professional development programs, or reflective practice (Guillen-Gamez et al., 2021). Teacher digital competence has long been a focus in the field, receiving attention through various studies, frameworks, and instruments designed for this purpose (Basantes-Andrade et al., 2022; Rodríguez et al., 2021).

Now, let's take a step back and consider pre-service teachers, who have yet to acquire these digital competences (Galindo-Domínguez & Bezanilla, 2021; Mcgarr & McDonagh, 2021; Quast et al., 2023). The one-shot educational technology courses (Cook, 2022), retention of outdated mindsets (Ertmer & Ottenbreit-Leftwich, 2010), and lack of effective role model practices in their initial teacher education programs (Zipke et al., 2019) often leave them unprepared for the unexpected challenges technology can bring, both in and out of the classroom.

CONTACT Cemil Gökhan Karacan cemilgokhankaracan@gmail.com English Language & Literature, İstanbul Beykent University, Istanbul, Turkey
© 2025 ISTE

Developing pre-service teachers' teacher digital competence also deserves significant attention (Çebi et al., 2023; Gudmundsdottir & Hatlevik, 2018; Quast et al., 2023; Tondeur et al., 2020). This can be facilitated by gaining a deeper understanding of their daily practices as pre-service teachers, and can be achieved through tailored frameworks, models, professional development programs, and the observation of effective pedagogical integration of digital practices. As there is no sound framework or robust and specific instrument to first understand and then assess teacher digital competence for pre-service language teachers, the need for their digital competence development remains neglected (Quast et al., 2023), and there has been a very limited effort made to address this gap (Quast et al., 2023; Tondeur et al., 2017a). In response, the current methodological study aims to adapt and validate a teacher digital competence instrument for pre-service language teachers with the following research question:

1. How can DigCompEdu scale be adapted and validated to accurately assess the digital competence of pre-service language teachers, and what are the psychometric properties (factor structure, reliability, and validity) of the adapted scale?

Literature review

Teacher digital competence

Digital competence refers to the behaviors and understanding needed to effectively and responsibly use digital technologies in various contexts, including educational settings (Ferrari & Punie, 2013; Sorochinsky, 2021). This concept encompasses a set of skills, knowledge, awareness, and attitudes that enable individuals to access, manage, create, and share digital information and resources (Krumsvik, 2014). Moreover, it empowers them to collaborate and express themselves on digital platforms (Krumsvik, 2014). Teachers who possess digital competence are better equipped to engage in effective language teaching by enhancing their professional growth through technology, creating stimulating and interactive learning opportunities for students, discovering authentic resources such as news articles or video clips more efficiently, and empowering learners with essential digital competences to communicate in diverse contexts (Skantz-Åberg et al., 2022).

Digital competence has become increasingly crucial for individuals to leverage opportunities and address the challenges posed by digital technologies, while also participating effectively in the knowledge society and economy of the twenty first century. As the demands on educators evolve and digital devices become ubiquitous, it has become essential for teachers to develop their digital competences as well. To support this need, several national and international frameworks, self-assessment tools, and training programs have been developed to assess teachers' skills, identify their training needs, and offer targeted training.

The DigCompEdu framework: overview

The European Parliament aimed to establish a common European reference framework for policymakers, social partners, education and training providers, and learners. This framework supports policies related to employment, social policy, and youth (OECD, 2005). Digital competence was identified as one of the eight essential competences in this framework. To further explore and develop digital competence across Europe, the European Commission launched the DigComp project, which extends beyond formal, non-formal, and informal learning contexts. It covers not only basic technical skills but also the ability to browse, evaluate, and manage information, communicate and collaborate, create digital content, and solve problems (Ferrari & Punie, 2013).

DigCompEdu is a scientifically sound framework that helps guide policy and can be adapted for the implementation of regional and national tools and training programs (Redecker, 2017). It provides a common language and approach that facilitates dialogue and the exchange of best

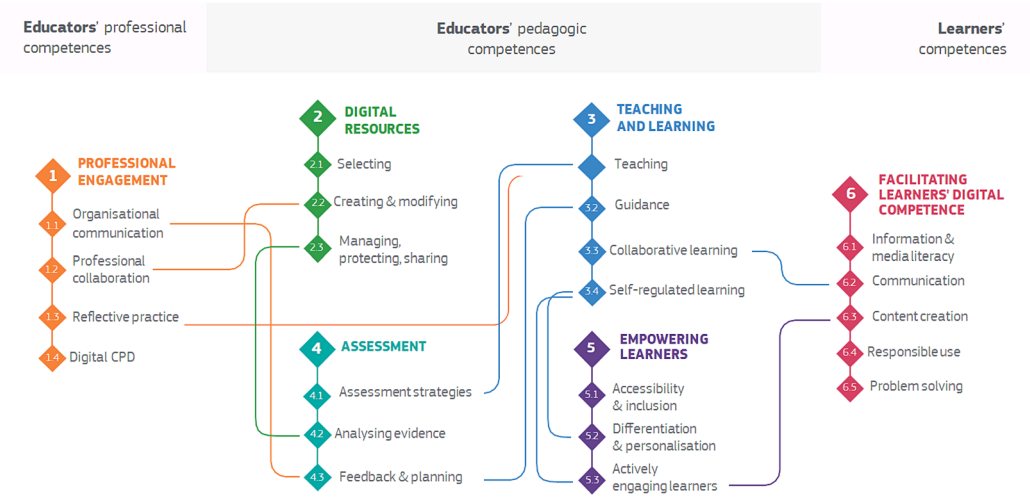

Figure 1. DigCompEdu framework.

practices across borders. Suitable for use in various educational stages—from higher and adult education to non-formal learning contexts—the DigCompEdu framework serves as a reference point for developing digital competences. It examines digital competences comprehensively through six competence areas (Redecker, 2017) (Figure 1).

It outlines six key areas or categories, each addressing different aspects of digital competence for teachers. These categories focus on the professional, pedagogical, and learner-centered aspects of teaching. Here's a breakdown of the DigCompEdu categories for teachers:

1. **Professional Engagement**
   This category focuses on how educators use digital tools to engage in professional development, collaboration, and communication. It emphasizes the need for teachers to engage with online professional communities, participate in digital professional development, and use digital technologies for administrative and organizational tasks.
2. **Digital Resources**
   Teachers should be adept at identifying, evaluating, and creating digital resources. This category highlights the importance of finding high-quality digital content, adapting and modifying it to fit specific educational contexts, and sharing resources responsibly with others while adhering to copyright laws and ethical standards.
3. **Teaching and Learning**
   This area emphasizes the integration of digital technologies into teaching strategies and learning activities. It focuses on how educators design and implement digitally-enhanced learning experiences, ensuring that these tools are used to support different teaching methods, from interactive activities to personalized learning pathways.
4. **Assessment**
   Digital technologies offer innovative ways to assess student learning. This category focuses on using digital tools to assess, monitor, and provide feedback on student performance. It includes utilizing data analytics, formative and summative assessment tools, and providing timely, constructive feedback to enhance learning outcomes.
5. **Empowering Learners**
   Teachers should use digital tools to foster student autonomy and support differentiated learning. This category highlights how educators can create inclusive and personalized learning environments, catering to diverse learning needs, and encouraging students to take ownership of their learning through digital means.

6. **Facilitating Learners' Digital Competence**
   Beyond using technology themselves, educators must also help students develop their own digital competence. This category focuses on teaching students how to safely and effectively use digital tools for learning, communication, and collaboration, and to critically evaluate digital information.

Evaluation of pre-service teachers' digital competences

Over the years, researchers have made considerable efforts to evaluate pre-service teachers' digital competences using a variety of frameworks and methodologies. The development of these frameworks often involves adapting tools designed for general populations or in-service teachers to fit the context of pre-service educators. This approach acknowledges the unique position of pre-service teachers, who are still in the formative stages of their professional development and are primarily focused on building foundational skills in teaching and learning. Studies such as those by Tondeur et al. (2017a) have emphasized the necessity of tailoring assessments to capture the specific digital competences needed at this stage.

Toward this purpose, various frameworks (Mouza, 2016; Tondeur et al., 2017b) and a variety of tools such as surveys (Anggeraini et al., 2019; Tømte et al., 2015), interviews and observation (Tømte et al., 2015), self-ratings (Napal Fraile et al., 2018), performance assessment-based tasks (Aesaert et al., 2015), checklists (Maiier & Koval, 2021), scales (Lázaro Cantabrana et al., 2019; Rodríguez et al., 2021) and a multi-faceted approach (Maderick et al., 2016) have been employed.

The use of multifaceted approaches is increasingly seen as crucial for comprehensive evaluation. Maderick et al. (2016) argued that while perception-based questionnaires provide useful data, integrating additional methods such as focus group discussions or performance tasks could yield a more accurate representation of digital competence. Similarly, mixed-method designs that incorporate both qualitative and quantitative data, like those used by Tømte et al. (2015), emphasize the importance of triangulating data to capture the complexity of teachers' digital capabilities.

Performance-based tasks and objective tools have also been highlighted as effective for assessing digital competence. Aesaert et al. (2015) adopted a performance-based approach to evaluate ICT competences, a model that could be adapted for teacher education. Moreover, objective tools like the COMDID-C test developed by Lázaro Cantabrana et al. (2019) offer a criterion-referenced, multidimensional framework validated by experts, providing a systematic way to measure digital competence beyond self-perception. While these approaches offer robust frameworks, context-specific studies were also present. The need to contextualize digital competence assessments is evident in studies like that of Quast et al. (2023), which focused on validating digital competence in the German teacher education system. While the study provided valuable insights, it underscored the importance of tailoring assessment tools to the specific characteristics of local education systems to enhance their relevance and applicability.

Furthermore, integrating multiple dimensions of digital competence, such as pedagogical and professional elements, has emerged as a critical aspect of comprehensive evaluations. For instance, the Technological Pedagogical Content Knowledge (TPACK) framework (Koh et al., 2014) emphasizes the integration of digital tools into teaching, learning, and assessment. Our study builds upon this approach by distinguishing between Unified Pedagogic Digital Competence (UPDC) and Professional Engagement and Development (PED), recognizing that pre-service teachers not only use digital tools to facilitate learning but also perceive their digital competence as integral to their ongoing professional growth and identity development.

The challenge of adapting frameworks and tools designed for in-service teachers to pre-service contexts has been a recurring theme. For instance, Reisoğlu and Çebi (2020) noted that many training programs rely on frameworks such as DigCompEdu (Redecker, 2017), originally intended for experienced teachers, leading to a mismatch between program content and the

needs of novice educators. Similarly, Romero-García et al. (2020) highlighted the limitations of using scales adapted from general citizen frameworks like DigComp when assessing future teachers' competences. This calls for a more targeted approach in developing instruments that reflect the specific requirements of pre-service teachers at various stages of their career trajectory.

Methodology

This quantitative research study aimed to validate and adapt a teacher digital competence scale to pre-service language teachers of English.

Design

This study employed a cross-sectional methodological design to adapt and validate the DigCompEdu Scale for pre-service English language teachers. The research was conducted in following phases: pilot testing, exploratory factor analysis (EFA), and confirmatory factor analysis (CFA) to establish the reliability and validity of the adapted scale.

Participants

This scale adaptation study had two distinct groups of participants for its EFA and CFA analyses processes. Pre-service language teachers of English refer to students in the English language teaching departments regardless of their school years.

First, a group of 220 PSELTs from initial teacher education programs at 40 universities across Türkiye was reached through random sampling by dissemination of an online form. The data coming from this sample was used for EFA.

In the EFA sample ($N = 220$), participants were primarily aged 21 (58.2%), with smaller groups aged 22 (20.5%), 23 (6.4%), and 24 (15.0%). The majority of participants were female (69.5%), while males made up 30.5%.

Secondly, a group of 228 PSELTs from more than 40 universities across Türkiye was reached through random sampling by dissemination of an online form. Gender distribution in this sample was 67.5% ($n = 154$) female and 32.5% ($n = 74$) male. The average age of participants was 21.35 years (SD = 1.277), with a median age of 21 and a mode of 21. The age of participants ranged from 18 to 24 years.

Data collection instruments

DigCompEdu self-assessment instrument

The Digital Competence Framework for Educators (DigCompEdu) Self-Assessment Instrument, developed by Redecker (2017) on behalf of European Commsission, is a comprehensive tool designed to assess educators' digital competences across six areas: Professional Engagement, Digital Resources, Teaching and Learning, Assessment, Empowering Learners, and Facilitating Learners' Digital Competence. The original scale consists of 22 Likert-type items with five response options ranging from "Strongly Disagree" to "Strongly Agree." It has been widely validated and exhibits high internal consistency, with a reported Cronbach's Alpha of 0.94.

Rationale for adaptation

Considering that the original scale was originally designed for in-service teachers with statements referring to in-class practices, PSETs' teacher digital competence could only be determined and researched through an adapted scale. Therefore, this study adapted the DigCompEdu scale for

pre-service language teachers of English. The adaptation aimed to ensure the inclusion of PSETs' professional practices before their day-to-day teaching starts.

Adaptation process

The adaptation of the DigCompEdu Scale involved a meticulous process to ensure its suitability for PSELTs in Türkiye. Initially, a panel of three experts in English language teaching and educational technology reviewed the original instrument to assess its relevance and comprehensiveness for the target population. Based on their feedback, items were reworded to better align with the context of English language teaching and initial teacher education. The preliminary version of the adapted scale was then piloted with a sample of 63 PSELTs to evaluate item clarity, relevance, and cultural appropriateness. Insights from the pilot participants led to further refinements of the items to enhance clarity and relevance.

During the exploratory factor analysis (EFA), two items—DR1 (Selecting Digital Resources) and DR3 (Managing, Protecting, Sharing Digital Resources)—we removed because they exhibited low factor loadings and did not align well with the identified factors. This refinement ensured that the final instrument accurately measures the digital competences specific to PSELTs.

Adapted DigCompEdu scale for pre-service English language teachers

The adapted scale consists of two-factor scale with 20 Likert-type items, each with five response options. The two factors identified were Unified Pedagogic Digital Competence (UPDC) and Professional Engagement and Development (PED).

During the exploratory factor analysis (EFA), two items—DR1 (Selecting Digital Resources) and DR3 (Managing, Protecting, Sharing Digital Resources)—were removed due to low factor loadings and their failure to align with the UPDC and PED factors. A detailed presentation of the final scale, including its items and factors, is provided in the Appendix A.

The Professional Engagement and Development factor represents pre-service English language teachers' adeptness in leveraging digital platforms and tools for their professional interactions, development, and innovation. It encompasses their expertise in using digital technologies for communication, collaborating with colleagues across boundaries, continuously developing their digital teaching skills, participating in online professional development opportunities, and creating or modifying digital resources—especially digital activities and materials tailored to the teaching context. This holistic approach prepares them for a digitally advanced teaching environment, bridging the gap caused by their limited practical teaching experience.

The Unified Pedagogic Digital Competence factor represents pre-service English language teachers' proficiency in utilizing digital technologies to enhance pedagogical practices and empower students. This includes their ability to employ digital tools in designing, planning, and executing various stages of the teaching-learning process, emphasizing learner-centered methodologies. It encompasses their competence in using digital means for assessment by facilitating tailored feedback and support based on data-driven insights. The factor also addresses their capacity to leverage digital technologies to enhance learners' active engagement, provide individualized learning experiences, promote inclusivity and accessibility, and facilitate the development of learners' digital competences. This comprehensive competence prepares them to overcome the constraints of their limited practical experience, fostering a learning environment that is engaging, personalized, and digitally progressive. Each statement on the scale is rated on a 5-point Likert scale, representing the frequency and complexity of technology use. A higher score indicates a higher level of digital competence. It is important to note that this scale serves as a guideline rather than an absolute measure of digital competence.

The revised version of the DigCompEdu Scale, following the removal of the two items, exhibited excellent internal consistency, with a Cronbach's Alpha of 0.95, indicating high reliability.

Data collection procedure

The data collection process consisted of two phases and involved two groups of PSETs. After receiving ethics approval from the university, the link for the online form was exclusively sent to potential research participants, and the items were only available to the respondents after the first part, which contained a digital informed consent form.

During the data collection process, information regarding the research aim, data confidentiality, and use solely for the purpose of the research was shared with the participants. It took approximately 15 minutes for participants to fill out the form. More than 40 universities' language teacher education programs in Turkiye were reached, and participants filled out the online form for EFA. In the subsequent phases, the same process was followed for CFA. Participants' time was financially compensated through a lucky draw, which randomly and anonymously selected 10 participants to receive a coupon worth 150 Turkish lira from well-known online shopping platforms.

Pilot testing

To refine the adapted DigCompEdu scale and ensure its suitability for pre-service English language teachers, a pilot test was conducted with a sample of 60 PSELTs. Participants were selected using convenience sampling and it included a diverse range of backgrounds in terms of age, gender, and technological proficiency.

During the pilot testing phase, participants were asked to complete the preliminary version of the adapted scale and provide feedback on the clarity, relevance, and comprehensiveness of each item. The survey included open-ended questions at the end, inviting participants to comment on any items they found confusing or irrelevant. Some pointed out that some items did not fully align with their experiences as pre-service teachers, highlighting areas where the scale could be better tailored to their context.

Based on the feedback, adjustments were made to align the scale with the pre-service context, which included revising items to better reflect the experiences and responsibilities of pre-service teachers, ensuring the scale was contextually appropriate.

Additionally, the pilot test provided an opportunity to assess the reliability of the scale. Preliminary analysis showed a Cronbach's alpha of 0.89, indicating good internal consistency even at this early stage. Participants reported that the scale was generally easy to understand and complete, taking approximately 12–15 minutes on average.

The pilot testing phase was crucial in enhancing the validity and reliability of the adapted scale. By incorporating the insights and experiences of actual pre-service teachers, the final instrument was better positioned to accurately assess their digital competences. This iterative process ensured that the scale was not only theoretically sound but also practically relevant and user-friendly for the target population.

Results

Adaptation of teacher digital competence DigCompEdu scale for pre-service language teachers

The data coming from two different data collection time points were analyzed using SPSS 22, Jamovi and AMOS statistical analysis softwares. First, data were screened for suitability for the factor analysis. Six outliers were identified and removed from the data set by calculating missing values and Mahalanobis distance.

The Kaiser–Meyer–Olkin (KMO) sample adequacy index showed the sample adequacy. To see if the questions cluster around the factors, factor analysis was required to be run (Ahn et al., 2023; Beavers et al., 2019). The appropriateness of the data for the EFA process was ensured by examining the Kaiser–Meyer–Olkin (KMO) measure of sampling adequacy and

Bartlett's test of sphericity. Based on the factor loadings and eigenvalues, the optimal number of factors to retain was identified.

Exploratory factor analysis conditions

To ensure the suitability of the data for conducting an exploratory factor analysis, several conditions needed to be met.

According to Tabachnick and Fidell (2019), a common recommendation is to have a sample size that is at least ten times the number of variables. With 220 participants and 22 items, the study meets this criterion with a 10:1 participant-to-item ratio.

Before proceeding with the EFA, the Kaiser–Meyer–Olkin (KMO) measure of sampling adequacy and Bartlett's test of sphericity were performed to assess whether the data were appropriate for factor analysis. The KMO statistic evaluates the proportion of variance among variables that might be common variance, with values greater than 0.5 considered acceptable for factor analysis (Kaiser, 1974). The calculated KMO value was 0.944, indicating excellent sampling adequacy and satisfying this condition (see Table 1).

Bartlett's test of sphericity examines whether the correlation matrix is significantly different from an identity matrix, which would imply that variables are sufficiently correlated for factor analysis (Bartlett, 1950). A statistically significant result ($p < .05$) is required to meet this condition (Nunnally & Bernstein, 1994). In this study, Bartlett's test yielded a significant result (see Table 1), confirming that the variables are adequately correlated.

Bartlett's test yielded a chi-square value of 2237.436 with 190 degrees of freedom and a p value less than .001 (see Table 1), indicating that the correlation matrix is significantly different from an identity matrix. This confirms that the variables are sufficiently correlated for factor analysis (Çokluk Bökeoğlu & Koçak, 2016).

By fulfilling these conditions—the recommended sample size, a high KMO value, and a significant Bartlett's test—the data were deemed appropriate for conducting the EFA.

Exploratory factor analysis processes

The construct validity and factor loadings of the scale were determined as a result of exploratory factor analysis conducted. Before deciding on the number of factors to be extracted, a scree plot was created (Figure 2).

While it is possible to extract as many factors as there are measured variables in an EFA, often the majority of variance can be explained with fewer factors (Benson & Nasser, 1998). Theorists regard factor extraction as the most crucial decision in EFA, as selecting too few or too many factors can lead to significant issues (Benson & Nasser, 1998; Preacher et al., 2013). Watkins (2021) also points to the lack of an "infallible method to identify the true number of factors" (p. 84).

In our case, the statistical software initially extracted more than three factors. However, upon careful examination of the scree plot, it became evident that a two-factor model was more suitable. This conclusion was based on the eigenvalues above and to the left of the imaginary straight line, which are the factors recommended for retention (Pett, 2003). The eigenvalues for the first and second factors were 9.206 and 1.379, respectively, both exceeding the standard eigenvalue threshold of 1. We explored multiple models, but those with three or more factors did not explain an acceptable amount of variance. These considerations led us to adopt the

Table 1. KMO and Bartlett's Test.

Measure	Kaiser–Meyer–Olkin (KMO)	Bartlett's Test of Sphericity
Value/Statistic	0.944	$X^2 = 2237.436$
Degrees of Freedom (df)	N/A	190
p-value	N/A	<.001

Note. KMO doesn't produce df and p values.

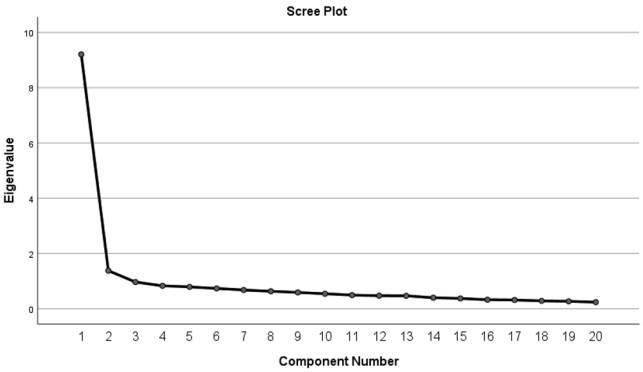

Figure 2. Scree plot for EFA.

Table 2. Factor Correlations.

	Factor 1	Factor 2
Factor 1	1.000	0.643
Factor 2	0.643	1.000

Table 3. Component Score Covariance Matrix.

Components	Component 1	Component2
Component 1	1413	1286
Component 2	1286	1413

two-factor model. Combined, these two factors explained over 50% of the variance, which will be detailed further in the following sections.

In Table 2, factor correlations in matrix are presented. Factors should be correlated with each other, but these correlation powers should not be too high. Our analysis showed that there weren't high correlations between our variables which shows that factors address different aspects of a construct. Thus, it can be ascertained that our data do not have multicollinearity. The given table is a Factor Correlation Matrix, presenting the correlation coefficients between two factors, Factor 1 and Factor 2. The correlation between a factor and itself is always 1.000, which is why the diagonal entries are 1.000 for both Factor 1 and Factor 2. The off-diagonal entries represent the correlation between the two different factors. Specifically, the correlation between Factor 1 and Factor 2 is 0.643. This value suggests a moderate positive relationship between the two factors: as Factor 1 increases, Factor 2 tends to increase as well, and vice versa.

Component Score Covariance Matrix (Table 3) represents the covariances between the scores of two components—Component 1 and Component 2. The diagonal values in the matrix, both being 1.413, signify the variances for Component 1 and Component 2, indicating considerable score fluctuation. The off-diagonal figure, 1.286, represents the covariance between the two components, implying a substantial positive correlation: as one component's score rises, so does the other.

As the statistical software provided models with three or more factors, we manually chose to extract two factors based on theoretical considerations and the scree plot analysis. Factor loadings are presented in Table 4. The table showcases factor loadings and uniqueness values for the two factors. Items PE1 to PE4 (Professional Engagement items) and DR2 (Digital Resources item) have significant loadings on Factor 2, indicating they are strongly associated with this factor. Conversely, items TL1 through FLDC5 load significantly on Factor 1, signifying their strong association with this factor. The uniqueness values represent the variance in each item that is not explained by the two factors; lower values indicate better representation by the factors.

Table 4. Factor Loadings and Uniqueness Values.

Items	Factor 1	Factor 2	Uniqueness
PE1	–	0.705	0.551
PE2	–	0.876	0.411
PE3	–	0.668	0.712
PE4	–	0.821	0.591
DR2	–	0.484	0.687
TL1	0.536	–	0.526
TL2	0.496	–	0.551
TL3	0.510	–	0.452
TL4	0.602	–	0.401
AS1	0.784	–	0.393
AS2	0.738	–	0.481
AS3	0.521	–	0.619
EL1	0.834	–	0.499
EL2	0.916	–	0.368
EL3	0.679	–	0.500
FLDC1	0.757	–	0.498
FLDC2	0.720	–	0.506
FLDC3	0.622	–	0.502
FLDC4	0.744	–	0.596
FLDC5	0.698	–	0.579

Table 5. Initial and Rotated Eigenvalues from Factor Analysis.

	Initial Eigenvalues			Rotated solution		
Factors	Total	% of Variance	Cumulative %	Total	% of Variance	Cumulative %
Factor 1	9.206	46,029	46,029	9206	46,029	46,029
Factor 2	1.379	6896	52,925	1379	6896	52,925

Our model demonstrated strong factor loadings, with values ranging from 0.484 to 0.916 after suppressing loadings lower than 0.40. According to Comrey and Lee (2013), loadings above 0.30 are acceptable, and those exceeding 0.71 are considered excellent. Thus, our loadings range from fair to excellent, indicating a robust factor structure.

We used Principal Component Analysis (PCA) as the extraction method due to its simplicity, effectiveness in noise reduction, and ability to retain as much variation from the original dataset as possible (Jolliffe & Cadima, 2016; Meehl, 1990). PCA does not assume linearity and results in uncorrelated components, making it suitable for our exploratory purposes. While some researchers suggest that Principal Axis Factoring (PAF) is more appropriate for identifying latent constructs, PCA remains a valid choice when the goal is data simplification (Fabrigar et al., 1999).

An oblique rotation method, specifically Promax, was applied because it accommodates the intercorrelations commonly found among social science variables (Meehl, 1990). This method allows factors to correlate, aligning with the theoretical expectation that dimensions of digital competence are interconnected.

The factor extraction involved manually selecting two factors with eigenvalues greater than 1, following the Kaiser criterion and informed by theoretical considerations and scree plot analysis. We suppressed factor loadings below 0.40 to enhance factor interpretability, leading to the elimination of items DR1 and DR3 (Stevens, 2012). Consequently, the number of scale items decreased from 22 to 20, refining the instrument for better reliability and validity.

As shown in Table 5, these two factors combined explain 52.925% of the total variance. According to Hair et al. (2010), explaining over 50% of the variance is acceptable in social science research, as it demonstrates that the model accounts for a substantial portion of the data's variability. This finding supports the adequacy of the two-factor solution in representing the underlying structure of digital competences among pre-service English language teachers.

In the process of factor extraction, we not only considered the two factors with eigenvalues greater than 1 but also analyzed the complete set of 20 components that emerged from the

Table 6. Total Variance Explained by Principal Component Analysis.

	Initial Eigenvalues	Extraction Sums of Squared Load	Rotation Sums of Squared Load
Component	Total	% of Variance	Cumulative %
1	9.206	46.029	46.029
2	1.379	6.896	52.925

Extraction Method: Principal Component Analysis.
When components are correlated, sums of squared loadings cannot be added to obtain a total variance.

analysis. Table 6 provides a detailed breakdown of the variance explained by each of these components.

Table 6 details the diminishing variance explained by each additional component, culminating in 100% of the variance accounted for by the 20th component. This underlines not only the significant contributions of the first two factors but also the value of the other components in representing the complex data. Our approach, aligned with the principles of PCA, effectively harnesses this complexity and reaffirms the efficacy of PCA in analyzing multifaceted data.

In order to confirm the factors generated by EFA, CFA should be conducted. CFA, a type structural equation model, is used to measure the relationship between observed and latent variables (Gallagher & Brown, 2013).

Confirmatory factor analysis

Following the identification of the factor structure through EFA, a CFA was conducted to test and validate the proposed factor structure. The analysis was performed using structural equation modeling software, AMOS. Various model fit indices were assessed to evaluate the adequacy of the model's fit to the data, including the chi-square statistic, Comparative Fit Index (CFI), Tucker-Lewis Index (TLI), and Root Mean Square Error of Approximation (RMSEA).

At the conclusion of the EFA, two scale items were eliminated, resulting in a two-factor structure. For the CFA, a higher-order model was employed, as the two identified factors were conceptualized as components of a broader construct—digital competence. A first-order CFA was initially conducted, and Figure 3 presents the corresponding first-order model.

In the first model, there is no evidence of extremely high correlations between the two factors, indicating that the factor extraction process was successful. The model fit indices for this first-order CFA are not presented here, as they are identical to those of the higher-order model, which will be discussed later in this section. Figure 4 illustrates the higher-order model.

With this model, Factor 1 (F1) and Factor 2 (F2) are connected to the general component of digital competence. The chi-square value was calculated as $\chi^2 = 315.334$ (df = 169, $p < .000$). Although the chi-square value was found to be statistically significant—contrary to what is typically desired (Nunnally & Bernstein, 1994)—an alternative method, the chi-square divided by degrees of freedom (χ^2/df), can be used to assess model fit. A value less than two indicates a good fit (Kline, 2015). In our case, the calculation gives a value of 1.865, demonstrating good model fit. Other fit indices for the model include RMSEA = 0.062, GFI = 0.882, AGFI = 0.855, CFI = 0.924, and NFI = 0.852. As shown in Table 7, when all values are considered, the model exhibits an overall good fit.

In Table 7, the fit index values generally meet the criteria for an acceptable model fit. Table 8 further demonstrates distinct loading patterns, affirming the hypothesized two-factor structure. Factor 1 (F1) has strong, exclusive influence on items categorized under Teaching and Learning (TL), Assessment (AS), Empowering Learners (EL), and Facilitating Learners' Digital Competence (FLDC), while Factor 2 (F2) solely impacts items Digital Resources (DR2), and Professional Engagement (PE1, PE2, PE3, PE4). This clear separation of loadings supports the expected differentiation between the two factors.

The inter-rater reliability coefficient of the adapted scale was found to be 0.928, as indicated by both McDonald's ω and Cronbach's α values, as shown in Table 9.

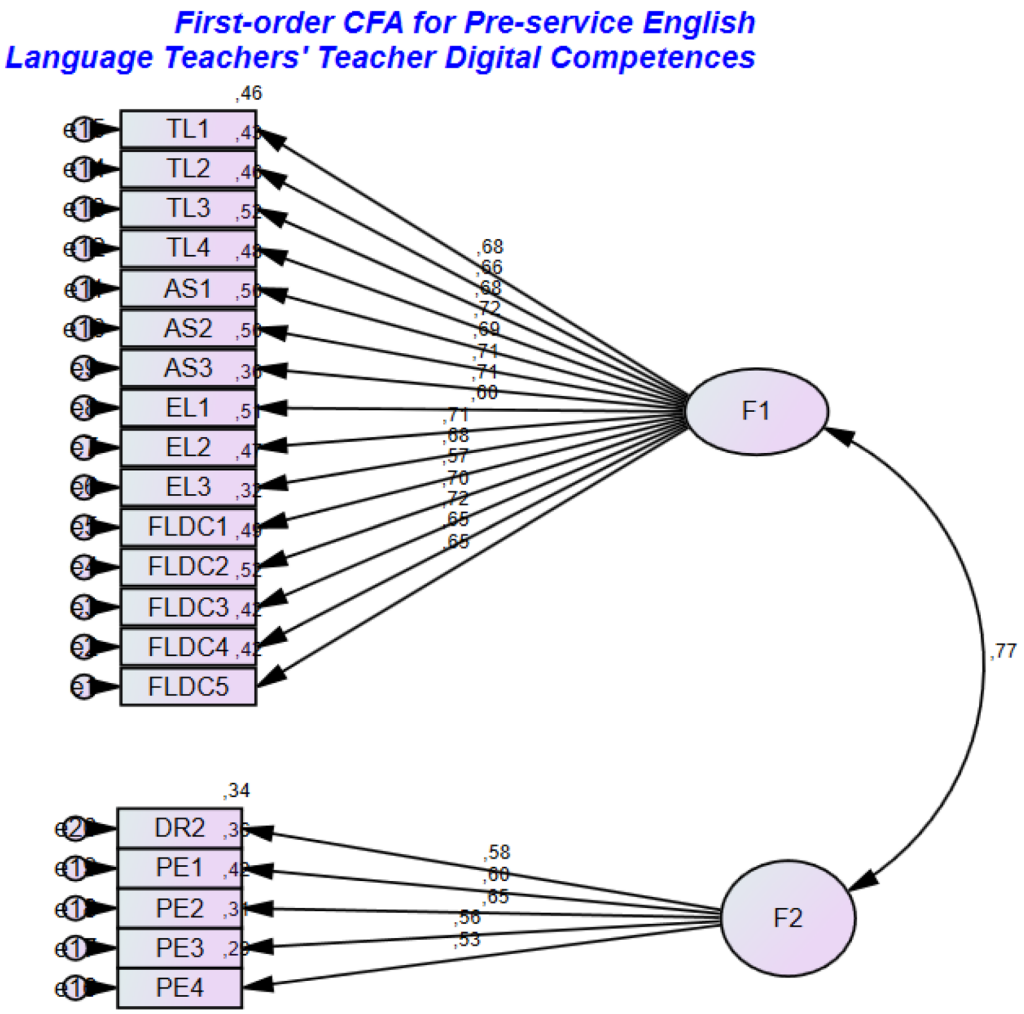

Figure 3. First-order CFA for PSETs' teacher digital competence.

Cronbach's Alpha scores greater than 0.80 are considered highly reliable (Bonett & Wright, 2015). The obtained reliability coefficients demonstrate that the adapted scale is a dependable tool for measuring PSETs' teacher digital competence.

Discussion and conclusion

The primary aim of this study was to adapt and validate a scale measuring the digital competence of pre-service English language teachers. The results from both the exploratory EFA and CFA strongly support the two-factor structure of the scale. Additionally, the scale demonstrated high reliability, indicating that it consistently measures PSETs' digital competence. Therefore, this study offers a reliable and valid tool for evaluating digital competence among PSETs, which is valuable for both research and practical applications.

The adapted scale used in this study was originally from the European Framework for the Digital Competence of Educators (Redecker, 2017), which was fundamentally developed for in-service teachers. The adaptation for pre-service teachers reflects the specific needs and experiences of this group, who are in the early stages of developing their teaching practice. DigCompEdu categorizes competences into professional, pedagogical, and learner-focused

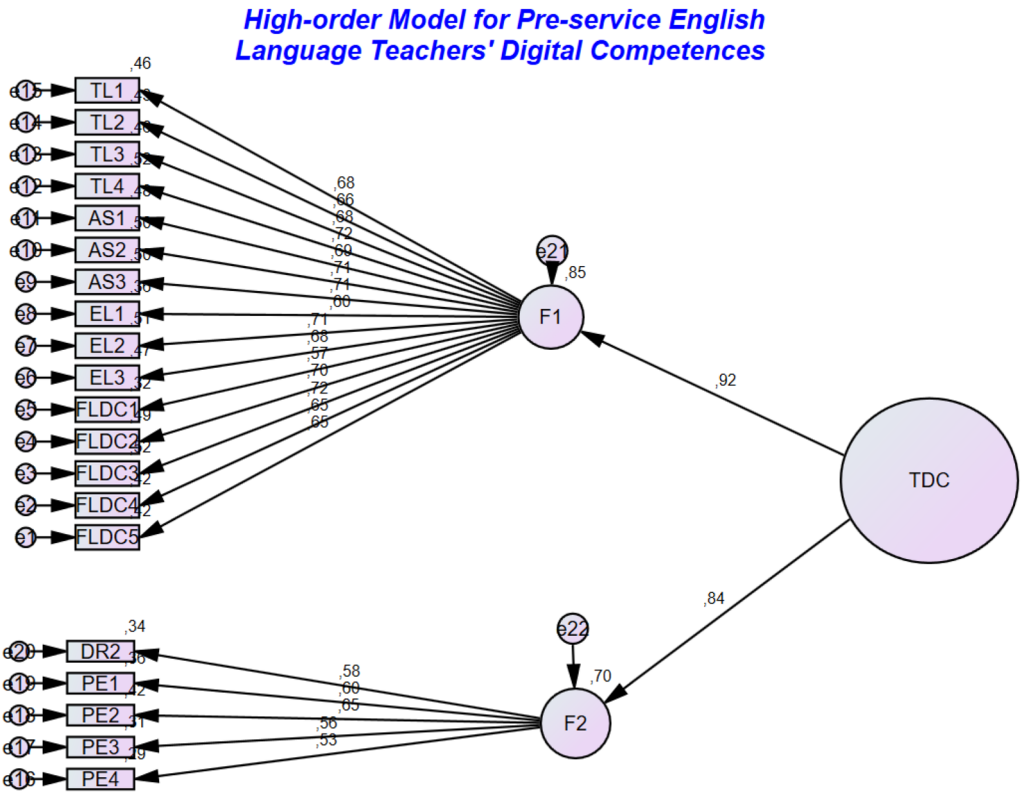

Figure 4. High-order model for PSETs' teacher digital competences.

Table 7. Model Fit Indices Comparison Table.

Fit indices	Good fit indices	Acceptable fit indices	Model indices
λ^2	$0.05 < p \leq 1.00$	$0.01 < p \leq .05$	<0.00
λ^2/df	$0 \leq \lambda^2$ /df ≤ 2	$2 < \lambda^2$/df ≤ 3	1.86
RMSEA	$0 \leq$ RMSEA $\leq .05$	$0.05 <$ RMSEA ≤ 0.08	0.062
CFI	$0.97 \leq$ CFI ≤ 1.00	$0.95 \leq$ CFI < 0.97	0.924
NFI	$0.95 \leq$ NFI ≤ 1.00	$0.90 \leq$ NFI < 0.95	0.852
AGFI	$0.90 \leq$ AGFI ≤ 1.00	$0.85 \leq$ AGFI < 0.90	0.855
GFI	$0.95 \leq$ GFI ≤ 1.00	$0.90 \leq$ GFI < 0.95	

RMSEA: Root Mean Square Error of Approximation; CFI: Comparative Fit Index; NFI: Normed Fit Index; AGFI: Adjusted Goodness-of-Fit-Index; GFI: Goodness-of-Fit Index.

dimensions. The adaptation for pre-service teachers in this study highlights that while pre-service teachers are still developing many of the skills emphasized in DigCompEdu, they are primarily focused on two key areas: pedagogical digital competence and professional development.

With that in mind, the extracted two-factor structure—Unified Pedagogic Digital Competence (UPDC) and Professional Engagement and Development (PED)—provides a nuanced understanding of how PSELTs engage in digital competence-related practices. The scale's ability to measure these two distinct but interrelated competences suggests that digital competence among pre-service teachers can be meaningfully categorized into pedagogical and professional dimensions. Given the different experiences that pre-service and in-service language teachers undergo, the factors generated for pre-service teachers accurately represent their digital competences. In that direction, the UPDC includes items related to teaching and learning, assessment, engaging learners, and facilitating learners' digital competences. Pre-service language teachers perceive sub-skills related to these categories as belonging under the same umbrella. These are all practices that a teacher with classes would typically engage in. Most of the time, pre-service teachers

Table 8. Standardized Direct Effects for the Factors.

	Factors	
Items	F2	F1
DR2	0.585	0.000
PE1	0.604	0.000
PE2	0.648	0.000
PE3	0.557	0.000
PE4	0.535	0.000
TL1	0.000	0.679
TL2	0.000	0.658
TL3	0.000	0.678
TL4	0.000	0.720
AS1	0.000	0.692
AS2	0.000	0.709
AS3	0.000	0.707
EL1	0.000	0.603
EL2	0.000	0.715
EL3	0.000	0.682
FLDC1	0.000	0.568
FLDC2	0.000	0.700
FLDC3	0.000	0.719
FLDC4	0.000	0.650
FLDC5	0.000	0.649

Table 9. Reliability Coefficients and Mean Estimates Table.

Estimates	McDonald's ω	Cronbach's α	M
Point estimate	0.928	0.928	80.276
95% CI lower-bound	0.915	0.913	78.572
95% CI upper bound	0.942	0.940	81.981

do not have regular classes to teach. They either provide one-on-one or group tutoring, attend practicum placements with minimal teaching duties—often as little as one hour biweekly, and a very small percentage are employed as part-time English language teachers at foreign language learning institutions. Therefore, pedagogy-related skills were grouped under the UPDC factor.

To further verify the extracted two-factor structure, the Professional Engagement items and the second item from the Digital Resources competence were grouped under the Professional Engagement and Development (PED) factor, as these competences relate to the professional development of pre-service teachers. It is plausible that they perceive all professional engagement sub-competences alongside the second sub-competence of Digital Resources, which pertains to the creation and modification of digital resources. This aligns with the fact that pre-service language teachers frequently create and modify language teaching materials as part of their coursework or final projects assigned by university professors. The first sub-competence of Digital Resources involves selecting digital resources, while the third involves managing, protecting, and sharing digital resources. However, pre-service language teachers are not typically expected to select materials independently during their studies; they are usually asked to modify existing materials or create new ones. Furthermore, they are not expected to manage, protect, or share digital resources in their daily practices. These responsibilities are more characteristic of in-service language teachers, who must manage digital resources for their various classes and levels of students, protect sensitive student data, and share digital resources with other teachers, students, or parents.

The distinction between the UPDC and PED factors is particularly significant in understanding the different stages of teachers' career trajectories. Studies such as Tondeur et al. (2020) have found that in-service teachers tend to exhibit higher levels of digital competence in areas such as resource management, privacy, and data security, which are closely aligned with the professional responsibilities of full-time educators. Conversely, pre-service teachers are more focused on developing pedagogical skills, such as creating and modifying instructional materials, as evidenced by the items clustered under the UPDC factor. This distinction highlights the

developmental nature of digital competence and the need for tailored support at different stages of a teacher's career.

A similar study to ours—though not based on the DigCompEdu framework—also identified a two-factor structure of ICT competencies in pre-service teachers: (1) competencies to support pupils for ICT use in class and (2) competencies to use ICT for instructional design (Tondeur et al., 2017a).

A number of studies (e.g., Çebi et al., 2023; Gudmundsdottir & Hatlevik, 2018; Tondeur et al., 2020) highlighted the increasing importance of digital competence in teacher education, particularly for pre-service teachers who must acquire skills that go beyond basic technological literacy. By categorizing digital competence into pedagogical and professional dimensions, the current scale surpasses traditional measures of technology use, offering a more nuanced understanding of how PSELTs engage with digital tools for both instructional purposes and ongoing professional development.

Pre-service teachers' digital competences should not be evaluated solely based on their ability to use technology, but also on how effectively they can integrate digital tools into their pedagogical practices and professional development. This perspective aligns with the research of Koh et al. (2014), who argue that effective teacher preparation programs must provide structured opportunities for pre-service teachers to practice and reflect on their use of technology in both simulated and real-world classroom environments. The findings of this study also align with other instruments developed to assess pre-service teachers' digital competence, though many of these instruments were initially designed for in-service teachers or general teacher populations. For instance, the Technological Pedagogical Content Knowledge (TPACK) framework by Koh et al. (2014) emphasizes the integration of technology in teaching practices. The UPDC factor in our study resonates with the pedagogical dimensions of TPACK, focusing on how pre-service teachers use technology to support teaching, learning, and assessment. However, the distinction made by the PED factor in our study highlights an area less emphasized in TPACK—namely, professional development and engagement with digital tools as part of a teacher's broader career trajectory. This suggests that pre-service teachers perceive their digital competence not only as a tool for classroom teaching but also as a means for developing their professional identity.

In Reisoğlu and Çebi's (2020) study, a teacher digital competence training program was developed, and the digital competence of pre-service teachers was assessed using diaries and focus group interviews. Due to the absence of appropriate data collection instruments specifically designed for evaluating pre-service teachers' digital competence, the researchers relied on qualitative measures to assess competence. Another concern is that the training programs for pre-service teachers were based on frameworks developed for in-service teachers, resulting in a mismatch between the content and the target audience.

Similarly, Çebi et al. (2023) conducted a case study to explore participants' perspectives on personal, pedagogical, and professional digital competence within the context of digital competence training. Additionally, many studies assessing pre-service teachers' digital competences employed data collection tools initially developed for citizens or in-service teachers, highlighting the lack of instruments tailored to pre-service teacher populations. In evaluating future teachers' teacher digital competence, Romero-García et al. (2020), for example, used a scale originally adapted for in-service teachers by Tourón et al. (2018). Furthermore, the scale had the DigComp framework as its basis, which was actually the framework developed for regular citizens.

In conclusion, this study provided a validated instrument that reflects the specific developmental context of pre-service teachers. The two-factor model—encompassing pedagogical and professional dimensions—captures the core areas of digital competence relevant at this stage and lays the groundwork for more targeted support and trainings in teacher preparation programs.

Implications and future research

This study has several practical implications. First, it provides a validated instrument that can be used to assess the digital competence of PSETs, making it a useful tool for teacher

training programs. Such programs can leverage the scale to identify specific areas where PSETs may require additional support in their digital skill development. Second, the scale can be utilized to evaluate the effectiveness of interventions designed to enhance digital competence, providing a benchmark for measuring progress over time. Additionally, the high reliability and validity of the scale suggest that it can serve as a robust tool for both teacher educators and researchers alike. For teacher educators, this scale provides an evidence-based framework for assessing pre-service teachers' readiness to meet the digital demands of modern classrooms. For researchers, the scale opens up new avenues for investigating how digital competence evolves throughout a teacher's career, from pre-service training to in-service professional development.

Future research should focus on further validating the scale across different contexts and populations. For example, it would be beneficial to explore whether the scale is applicable to practicing pre-service teachers, or if there are notable differences in digital competence between practicing and non-practicing PSETs. Additionally, examining the scale's applicability in various educational systems or cultural contexts would provide a more comprehensive understanding of its versatility.

Disclosure statement

No potential conflict of interest was reported by the author(s).

Funding

No funding was granted.

Notes on contributors

Dr. Cemil Gökhan Karacan is an Assistant Professor in the English Language & Literature program at Istanbul Beykent University. An alumnus of the English Language Teaching program at Istanbul University, he obtained both his master's degree and PhD in the same field from Bahçesehir University. Dr. Karacan's research focuses on language teacher education and teacher digital competence for both pre- and in-service teachers of English. As a technology enthusiast, he harbors a particular interest in CALL, specifically in educational augmented reality. He has also published numerous research studies on a myriad of topics including self-regulation, identity and second language acquisition.

Assoc. Prof. Tuncer Can is currently teaching at İstanbul University-Cerrahpaşa, Hasan Ali Yücel Faculty of Education, ELT Department where he completed MA in 2004 and PhD in 2011. In 2005, earning a Fulbright Scholarship spent a year at Syracuse University, NY, USA teaching Turkish via videoconferencing. Dr. Can has taken part in ten EU Erasmus+ Projects, related to immersive environments, teacher training and foreign language learning (1) CAMELOT, (2) YouRNI, (3) TABLIO, (4) GUINEVERE, (5) ARTICULAN, (6) YouALLs, (7) KEY SKILLS, (8) STREAMS, (9) SET4INCLUSION and (10) AI-ENABLED. Dr. Can has also edited and co-authored the "Less is More English Coursebook Series", "Integrated Skills in English: Full Circle Series", "Swifts English Coursebook Series" and "Oysters English Series" from Press Glocal. Dr. Can led teams to create 3 APPs to learn English; ApiLingua and Yeybi from Girift Technologies and the DİYALEKT APP and Platform for the Turkish Ministry of National Education. He is the director of IUC Continuing Education Center.

ORCID

Cemil Gökhan Karacan http://orcid.org/0000-0002-9663-5021
Tuncer Can http://orcid.org/0000-0001-8145-0772

References

Aesaert, K., Van Nijlen, D., Vanderlinde, R., Tondeur, J., Devlieger, I., & van Braak, J. (2015). The contribution of pupil, classroom and school level characteristics to primary school pupils' ICT competences: A performance-based approach. *Computers & Education*, *87*, 55–69. https://doi.org/10.1016/j.compedu.2015.03.014

Ahn, S., Graefe, B., Terosky, A. L., Baker, V. L., & Sun, J. C. (2023). Hands-on application of exploratory factor analysis in educational research. *In* A practical guide to teaching research methods in education (pp. 120–130). https://doi.org/10.4324/b23320-22

Anggeraini, Y., Faridi, A., Mujiyanto, J., & Linggar, D. A. (2019). Pre-service English teachers' views on digital literacy competences in language teaching. In ISET 2019: Proceedings of the 5th International Conference on Science, Education and Technology, ISET 2019, 29th June 2019, Semarang, Central Java, Indonesia (p. 453). European Alliance for Innovation.

Bartlett, M. S. (1950). Tests of significance in factor analysis. *British Journal of Psychology*, *3*, 77–85.

Basantes-Andrade, A., Casillas-Martín, S., Cabezas-González, M., Naranjo-Toro, M., & Guerra-Reyes, F. (2022). Standards of teacher digital competence in higher education: A systematic literature review. *Sustainability*, *14*(21), 13983. https://doi.org/10.3390/su142113983

Beavers, A. S., Lounsbury, J. W., Richards, J. K., Huck, S. W., Skolits, G. J., & Esquivel, S. L. (2019). Practical considerations for using exploratory factor analysis in educational research. *Practical Assessment, Research, and Evaluation*, *18*(6), 1–13.

Benson, J., & Nasser, F. (1998). On the use of factor analysis as a research tool. *Journal of Vocational Education Research*, *23*(1), 13–33.

Bonett, D. G., & Wright, T. A. (2015). Cronbach's alpha reliability: Interval estimation, hypothesis testing, and sample size planning. *Journal of Organizational Behavior*, *36*(1), 3–15. https://doi.org/10.1002/job.1960

Çebi, A., Çolak, C., Reisoğlu, İ., & Özdemir, T. B. (2023). Does context matter?: Examining personal, pedagogical, and professional digital competence. In P. Ordóñez de Pablos & M. N. Almunawar (Eds.), *Developing skills and competencies for digital and green transitions* (pp. 1–28). IGI Global.

Çokluk Bökeoğlu, Ö., & Koçak, D. (2016). Using Horn's parallel analysis method in exploratory factor analysis for determining the number of factors. *Educational Sciences-Theory & Practice*, *16*(2), 537–551.

Comrey, A. L., & Lee, H. B. (2013). *A first course in factor analysis*. Psychology Press.

Cook, D. (2022). Is the library one-shot effective? A meta-analytic study. *College & Research Libraries*, *83*(5), 739–750. https://doi.org/10.5860/crl.83.5.739

Ertmer, P., & Ottenbreit-Leftwich, A. (2010). Teacher technology change. *Journal of Research on Technology in Education*, *42*(3), 255–284. https://doi.org/10.1080/15391523.2010.10782551

Fabrigar, L. R., Wegener, D. T., MacCallum, R. C., & Strahan, E. J. (1999). Evaluating the use of exploratory factor analysis in psychological research. *Psychological Methods*, *4*(3), 272–299. https://doi.org/10.1037/1082-989X.4.3.272

Ferrari, A., & Punie, Y. (2013). *DIGCOMP: A framework for developing and understanding digital competence in Europe*. Joint Research Centre, Institute for Prospective Technological Studies. Publications Office of the European Union. https://doi.org/10.2788/52966

Galindo-Domínguez, H., & Bezanilla, M. J. (2021). Digital competence in the training of pre-service teachers: Perceptions of students in the degrees of early childhood education and primary education. *Journal of Digital Learning in Teacher Education*, *37*(4), 262–278. https://doi.org/10.1080/21532974.2021.1934757

Gallagher, R. P., & Brown, T. A. (2013). Introduction to confirmatory factor analysis and structural equation modeling. *In* R. P. Gallagher & T. A. Brown (Eds.), *The handbook of psychological assessment* (pp. 257–279). American Psychological Association.

Gudmundsdottir, G., & Hatlevik, O. (2018). Newly qualified teachers' professional digital competence: Implications for teacher education. *European Journal of Teacher Education*, *41*(2), 214–231. https://doi.org/10.1080/02619768.2017.1416085

Guillen-Gamez, F. D., Mayorga-Fernández, M. J., & Contreras-Rosado, J. A. (2021). Validity and reliability of an instrument to evaluate the digital competence of teachers in relation to online tutorials in the stages of early childhood education and primary education. *Revista de Educación a Distancia*, *21*(67), 474981. https://doi.org/10.6018/red.474981

Hair, J. F., Black, W. C., Babin, B. J., Anderson, R. E., & Tatham, R. L. (2010). SEM: An introduction. In *Multivariate data analysis: A global perspective* (pp. 629–686). Pearson Education.

Jolliffe, I. T., & Cadima, J. (2016). Principal component analysis: A review and recent developments. *Philosophical Transactions A*, *374*(2065), 20150202. https://doi.org/10.1098/rsta.2015.0202

Kaiser, H. F. (1974). An index of factorial simplicity. *Psychometrika*, *39*(1), 31–36. https://doi.org/10.1007/BF02291575

Kline, R. B. (2015). *Principles and practice of structural equation modeling* (4th ed.). Guilford Publications.

Koh, J. H. L., Chai, C. S., & Tsai, C. C. (2014). Examining the technological pedagogical content knowledge of Singapore pre-service teachers with a large-scale survey. *Journal of Computer Assisted Learning*, *30*(6), 547–558. https://doi.org/10.1111/jcal.12067

Krumsvik, R. J. (2014). Teacher educators' digital competence. *Scandinavian Journal of Educational Research*, *58*(3), 269–280. https://doi.org/10.1080/00313831.2012.726273

Lázaro Cantabrana, J. L., Usart Rodríguez, M., & Gisbert Cervera, M. (2019). Assessing teacher digital competence: The construction of an instrument for measuring the knowledge of pre-service teachers. *Journal of New Approaches in Educational Research*, *8*(1), 73–78. https://doi.org/10.7821/naer.2019.1.370

Maderick, J. A., Zhang, S., Hartley, K., & Marchand, G. (2016). Preservice teachers and self-assessing digital competence. *Journal of Educational Computing Research*, *54*(3), 326–351. https://doi.org/10.1177/0735633115620432

Maiier, N., & Koval, T. (2021). How to develop digital competence in pre-service FL teachers at university level. *Advanced Education*, *8*(18), 11–18. https://doi.org/10.20535/2410-8286.227639

Mcgarr, O., & McDonagh, A. (2021). Exploring the digital competence of pre-service teachers on entry onto an initial teacher education programme in Ireland. *Irish Educational Studies*, *40*(1), 115–128. https://doi.org/10.1080/03323315.2020.1800501

Meehl, P. E. (1990). Why summaries of research on psychological theories are often uninterpretable. *Psychological Reports*, *66*(1), 195–244. https://doi.org/10.2466/pr0.1990.66.1.195

Mouza, C. (2016). Developing and assessing TPACK among pre-service teachers: A synthesis of research. In M. C. Herring, M. J. Koehler, & P. Mishra (Eds.), *Handbook of technological pedagogical content knowledge (TPACK) for educators* (pp. 169–190). Routledge.

Napal Fraile, M., Peñalva-Vélez, A., & Mendióroz Lacambra, A. M. (2018). Development of digital competence in secondary education teachers' training. *Education Sciences*, *8*(3), 104. https://doi.org/10.3390/educsci8030104

Nunnally, J. C., & Bernstein, I. H. (1994). *Psychometric theory* (3rd ed.). McGraw-Hill.

Organisation for Economic Co-operation and Development (OECD). (2005). The OECD program definition and selection of competencies (2005). The definition and selection of key competencies. *Executive Summary*. OECD Publishing. https://www.oecd.org/pisa/35070367.pdf

Pett, M. A. (2003). *Making sense of factor analysis: The use of factor analysis for instrument development in health care research*. Sage.

Preacher, K. J., Zhang, G., Kim, C., & Mels, G. (2013). Choosing the optimal number of factors in exploratory factor analysis: A model selection perspective. *Multivariate Behavioral Research*, *48*(1), 28–56. https://doi.org/10.1080/00273171.2012.710386

Quast, J., Rubach, C., & Porsch, R. (2023). Professional digital competence beliefs of student teachers, pre-service teachers and teachers: Validating an instrument based on the DigCompEdu framework. *European Journal of Teacher Education*, *46*(5), 1–24. https://doi.org/10.1080/02619768.2023.2251663

Redecker, C. (2017). *European framework for the digital competence of educators: DigCompEdu (No. JRC107466)*. Joint Research Centre (Seville Site).

Reisoğlu, İ., & Çebi, A. (2020). How can the digital competences of pre-service teachers be developed? Examining a case study through the lens of DigComp and DigCompEdu. *Computers & Education*, *156*, 103940. https://doi.org/10.1016/j.compedu.2020.103940

Rodríguez, M. U., Cantabrana, J. L. L., & Cervera, M. G. (2021). Validation of a tool for self-evaluating teacher digital competence. *Educación XX1*, *24*(1), 353–373. https://doi.org/10.5944/educxx1.27080

Romero-García, C., Buzón-García, O., & De Paz-Lugo, P. (2020). Improving future teachers' digital competence using active methodologies. *Sustainability*, *12*(18), 7798. https://doi.org/10.3390/su12187798

Skantz-Åberg, E., Lantz-Andersson, A., Lundin, M., & Williams, P. (2022). Teachers' professional digital competence: An overview of conceptualisations in the literature. *Cogent Education*, *9*(1), 2063224. https://doi.org/10.1080/2331186X.2022.2063224

Sorochinsky, M. A. (2021). Digital competence of teachers and students in Yakutia: Problems and prospects of E-lEarning during the pandemic. *Educação*, *46*(1), 1–16. https://doi.org/10.5902/1984644466423

Stevens, J. P. (2012). *Applied multivariate statistics for the social sciences*. Routledge.

Tabachnick, B. G., & Fidell, L. S. (2019). *Using multivariate statistics* (7th ed.) Pearson.

Tømte, C., Enochsson, A. B., Buskqvist, U., & Kårstein, A. (2015). Educating online student teachers to master professional digital competence: The TPACK-framework goes online. *Computers & Education*, *84*, 26–35. https://doi.org/10.1016/j.compedu.2015.01.005

Tondeur, J., Aesaert, K., Pynoo, B., Van Braak, J., Fraeyman, N., & Erstad, O. (2017a). Developing a validated instrument to measure preservice teachers' ICT competencies: Meeting the demands of the 21st century. *British Journal of Educational Technology*, *48*(2), 462–472. https://doi.org/10.1111/bjet.12380

Tondeur, J., Howard, S., Knezek, G., Voogt, J., Ifenthaler, D., Gibson, D., … Christensen, R. (2020). Based implications for policy and practice: Outcomes from EDUsummIT 2019 (Quebec)–The 6th International Summit on Information Technology in Education. In *EdMedia + Innovate Learning*. (pp. 475–478). Association for the Advancement of Computing in Education (AACE).

Tondeur, J., Scherer, R., Siddiq, F., & Baran, E. (2017b). A comprehensive investigation of TPACK within pre-service teachers' ICT profiles: Mind the gap!. *Australasian Journal of Educational Technology*, *33*(3), 46–60. https://doi.org/10.14742/ajet.3504

Tondeur, J., Van Braak, J., Sang, G., Voogt, J., Fisser, P., & Ottenbreit-Leftwich, A. (2012). Preparing pre-service teachers to integrate technology in education: A synthesis of qualitative evidence. *Computers & Education*, *59*(1), 134–144. https://doi.org/10.1016/j.compedu.2011.10.009

Tourón, J., Martín, D., Asencio, N., Pradas, S., & Íñigo, V. (2018). *Validación de constructo de un instrumento para medir la competencia digital docente de los profesores (CDD)/Construct validation of a questionnaire to measure teachers' digital competence (TDC)* (pp. 25–54). Revista Española de Pedagogía.

Uerz, D., Volman, M., & Kral, M. (2018). Teacher educators' competences in fostering student teachers' proficiency in teaching and learning with technology: An overview of relevant research literature. *Teaching and Teacher Education*, *70*, 12–23. https://doi.org/10.1016/j.tate.2017.11.005

Watkins, M. W. (2021). *A step-by-step guide to exploratory factor analysis with SPSS*. Routledge.

Zipke, M., Ingle, J., & Moorehead, T. (2019). The effects of modeling the use of technology with pre-service teachers. *Computers in the Schools*, *36*(3), 205–221. https://doi.org/10.1080/07380569.2019.1640038

Appendix A

Item ID	Statement	1	2	3	4	5
UPDC1	I can carefully consider how, when and why to use digital technologies in class, to ensure that they are used with added value.	I can't use technology in class.	I can make basic use of available equipment, e.g., Digital whiteboards or projectors.	I can use a variety of digital strategies in my teaching.	I can use digital tools to systematically enhance teaching.	I can use digital tools to implement innovative pedagogic strategies.
UPDC2	I can monitor my students' activities and interactions in the collaborative online environments we use.	I can't use digital environments with my students.	I can't monitor student activity in the online environments we use.	I can check on them and their discussions.	I can regularly monitor and analyze my students' online activity.	I can regularly intervene with motivating or corrective comments.
UPDC3	When my students work in groups or teams, I can lead them to use digital technologies to acquire and document evidence.	I can't lead them to use digital technologies to acquire and document evidence.	I can lead them to digital technologies to acquire and document evidence to some extent.	I can lead students working in groups to search for information online or to present their results in digital format.	I can effectively lead students working in teams to search for information online and present their results in a digital format.	I can effectively lead my students to exchange evidence and jointly create knowledge in a collaborative online space.
UPDC4	I can use digital technologies to allow students to plan, document and monitor their learning themselves (e.g., Quizzes for self-assessment, ePortfolios for documentation and showcasing, online diaries/ blogs for reflection.)	I can't use digital technologies to allow students to plan, document and monitor their learning themselves.	I can use quizzes for self-assessment to a limited extent.	To some extent, I can use, for example, quizzes for self-assessment.	I can use a variety of digital tools to allow learners to plan, document or reflect on their learning.	I can systematically integrate different digital tools to allow learners to plan, monitor and reflect on their progress.
UPDC5	I can use digital assessment formats to monitor student progress.	I can't monitor students' progress.	I can monitor students' progress regularly, but not with digital means.	I can use a digital tool, e.g., A quiz, to check on students' progress.	I can use a variety of digital tools to monitor student progress.	I can systematically use a variety of digital tools to monitor student progress.
UPDC6	I can analyze all data available to me to timely identify students who need additional support.	I can't analyze all data to timely identify students who need additional support.	I can only analyze academically relevant data, e.g., Performance and grades.	I can also consider data on student activity and behavior to identify students who need additional support.	I can regularly screen all available evidence to identify students who need additional support.	I can systematically analyze data and intervene in a timely manner.
UPDC7	I can use digital technologies to provide effective feedback.	I can't provide feedback.	I can use digital technologies to provide feedback to a limited extent.	I can use, for example, track changes in word processing software to provide feedback.	I can use a variety of digital tools to provide feedback.	I can systematically use a variety of digital tools to provide feedback.
PED1	I can systematically use different digital channels to enhance communication with students and fellow academics, e.g., Emails, blogs, the department's website, Apps.	I can't use digital communication channels.	I can use basic digital communication channels, e.g., E-mail.	I can combine different communication channels, e.g., E-mail and class blog or the department's website.	I can systematically select, adjust and combine different digital solutions to communicate effectively.	I can reflect on, discuss and proactively develop my communication strategies.
PED2	I can use digital technologies to work together with colleagues inside and outside my educational organization.	I can't use digital technologies to work together with colleagues inside and outside my educational organization.	Sometimes I can exchange materials with colleagues, e.g., *via* e-mail.	I can work together with colleagues in collaborative environments or use shared drives.	I can exchange ideas and materials, also with academics outside my organization, e.g., In an online professional network.	I can jointly create materials with other academics in an online network.

Item ID	Statement	1	2	3	4	5
PED3	I can actively develop my digital teaching skills.	I can't develop my digital teaching skills at all.	I can improve my skills through reflection and experimentation.	I can use a range of resources to develop my digital teaching skills.	I can discuss with peers how to use digital technologies to innovate and improve educational practice.	I can help colleagues in developing their digital teaching strategies.
PED4	I can participate in online training opportunities; e.g., Online courses, moocs, webinars, virtual conferences.	I can't participate in online training opportunities; e.g., Online courses, moocs, webinars, virtual conferences.	I can only participate in some forms of online training opportunities.	I can participate in many forms of online training opportunities.	I can participate in nearly all forms of online training opportunities.	I can easily participate in all kinds of online training.
PED5	I can create my own digital resources and modify existing ones to adapt them to my needs.	I can't create my own digital resources.	I can create worksheets with a computer, but then I print them.	I can create digital presentations, but not much more.	I can create and modify different types of resources.	I can set up and adapt complex, interactive resources.