# KERESTE ENDÜSTRİSİNDE ÇOKLU DİLMEDE DAİRE TESTERE VE YATAY ŞERİT TESTERE MAKİNELERİNİN KARŞILAŞTIRILMASI

Hızır Volkan GÖRGÜN[1] , Ender HAZIR[2]

[1,2] İstanbul Üniversitesi-Cerrahpaşa, Orman Fakültesi, Orman Endüstri Mühendisliği Bölümü,34473,İstanbul, TÜRKİYE
[1] volkan.gorgun@istanbul.edu.tr / [2] ender.hazir@istanbul.edu.tr

## Özet

Kereste endüstrisinin en önemli hammaddesi olan ağacın değeri, hem ekolojik öneminden dolayı, hem de kereste fabrikalarının ticari işletmeler olması nedeniyle daha fazla dikkate aldığı ekonomik nedenlerden dolayı artmaktadır. Ağaç, sadece kereste yapımında kullanıldığında, sadece yaklaşık %30'luk kısmının değerlendirilebildiği düşünülürse, bu konuda verilen kararların ne kadar önemli olduğunu ortaya koymuş olacaktır.

Kereste endüstrisinde, son yıllarda son ürün kerestenin değerinin artmasıyla ve değerli ithal ağaç türlerinin kerestesinin kullanımının yaygınlaşmasıyla birlikte kalite randımanı da dikkate alınmaya başlanmıştır. Ancak genellikle kapasite ve verim hesaplamalarında çıktının girdiye oranı olarak tanımlanabilecek miktar randımanı, hâlâ kereste endüstrisinde kullanılan en önemli belirteç olarak güncelliğini korumaktadır. Tomruğun silindirik formda olmasına karşın, büyük oranda dört yüzü düzgün dikdörtgenler prizması şeklinde ürün elde edilmesindeki dönüşüm sürecinden kaynaklanan artıklar, miktar randımanını düşüren en temel neden olarak sayılabilir. Bu kapsamda, diğer faktörlere göre nispeten oranı az olsa da, testerenin oluşturduğu biçme payı konusunda da çalışmalar yapılmaktadır.

Tomruk biçmede daha önce katrak testeresi kullanımı daha yaygınken, günümüzde kapasite odaklı ve nispeten daha ufak çaplı tomruk biçen fabrikalarda üretim daire testere, biçme payının azlığı, daha yüksek miktar randımanı ve kesiş kalitesinden dolayı yüksek kalite randımanının arandığı üretimlerde ise şerit testere tercihi yapılmaktadır. Birincil biçme aşaması olarak da adlandırılan tomruk biçmede yapılan bu tercih farklılığı, günümüzde ikincil biçme aşaması olarak da ifade edilen prizmadan veya kusurlu parçalardan son ürün kereste üretimine de yansımaya başlamıştır. Ancak kereste fabrikaları ticari işletmeler olduğu için, yatırım kararı verirken üretime ait faktörlerle birlikte kullanım kolaylığı, enerji tüketim miktarı gibi daha çok işletmeye ait faktörleri de dikkate almaktadır. Tüm teknik, mali ve işletmeye ait kriterler dikkate alındıktan sonra nihai karar verilmektedir.

Bu çalışma kapsamında, son yıllarda yaygınlaşmakta olan çoklu dilmede kullanılan daire testerelere alternatif olarak tercih edilen yatay şerit testerelerin kullanımı, teorik olarak karşılaştırılmıştır. Karşılaştırma kriterleri olarak, testere ve makine özellikleri teknik ve üretime ait kriterler, enerji tüketimi, kullanım kolaylığı gibi biçme operatörünün veya yöneticinin dikkate aldığı kriterler kullanılmıştır. Yapılan karşılaştırmalar sonucunda biçme payındaki azalış nedeniyle yatay şerit testerelerin ön plana çıktığı söylenebilir. Kereste fabrikaları da özellikle genel işletme giderlerinin çeşitli nedenlerle artması ve masif ağaç malzemenin değerinin artmasından dolayı, işletmeye ait kriterleri ikinci planda tutarak böyle bir tercih yaptığı da söylenebilir.

**Anahtar Kelimeler:** Kereste Endüstrisi, Çoklu Dilme, Daire Testere, Yatay Şerit Testere, İkincil Biçme

# COMPARING HORIZONTAL BANDSAW AND CIRCULAR SAWING MACHINES FOR RIPSAW IN LUMBER INDUSTRY

Hızır Volkan GÖRGÜN[1], Ender HAZIR[2]

[1,2] Istanbul University-Cerrahpasa, Faculty of Forest, Forest Industry Engineering Department, 34473,İstanbul, TÜRKİYE
[1] volkan.gorgun@istanbul.edu.tr / [2] ender.hazir@istanbul.edu.tr

## Abstract

Value of the tree, which is most important raw material of lumber industry increases due to both ecological importance and economic reasons that sawmills, considers more by the reason of being commercial company. When it is thought that if tree is used for lumber manufacturing only app. 30% part can be evaluated, the importance of the decisions about rational evaluation will stand out.

In lumber industry, quality yield becomes taken in consideration with increasing value of lumber and the usage of imported lumbers. However, quantity yield which can be defined as the ratio of output to input, it is still one of the most important determiner in lumber industry. Waste formed while the conversion process from cylindrical shape log to substantially having four-square shape lumber, is the most important reason decreasing quantity yield. Accordingly, because of lumber manufactured with sawdust, even if its ratio relatively small, there are studies about saw kerf for increasing quantity yield.

Frame saw were used in the past. At the present time, sawmills prefer increasing capacity and/or sawing relatively small-diameter logs use circular saw, while they prefer using band saw less for saw kerf to increase quantity yield and/or sawing and lumber quality. The choice difference at primary breakdown have passed to secondary breakdown process at the present time.

When sawmills give an investment decision, they take considers many factors such as ease of use, energy consumption etc. which are specific to management with mentioned technic production factors. After considering all technic, economic and management criteria, sawmills give decision due to being commercial companies.

In this study, horizontal band saw is used alternative to circular saw in ripsaw process were theoretically compared. Saw blade and machine characteristics were evaluated as technical criteria and energy consumptions, ease of use etc. which are more considered from operator and/or manager were used as management criteria for comparison. It can be said that horizontal band saws stand out related to decrease of sawing kerf. The result of several management criteria staying in background may have been occurred from increasing operational expenses of sawmills due to several reasons and increasing value of solid wood material.

**Key words:** Lumber Industry, Ripsaw, Circular Saw, Horizontal Band Saw, Secondary Breakdown

## INTRODUCTION

The value of wood material is continuously rising due to several reasons such as growing equivalent materials, increasing currency for imported tree species, influence to global ecological cycle etc. Therefore, issues of yield and value have become increasingly important for sawmills and another wood processing factories.

The production of wood products generally needs a series of transformation processes so that each one enables any reduction of the size by cutting off the wood (Aguilera & Martin, 2001). If the standing tree volume is evaluated 100%, sawn wood with all grade can be manufactured from only 38% of it (Kometter and Maravi, 2007). This decrement continues until to end product (Figure 1).

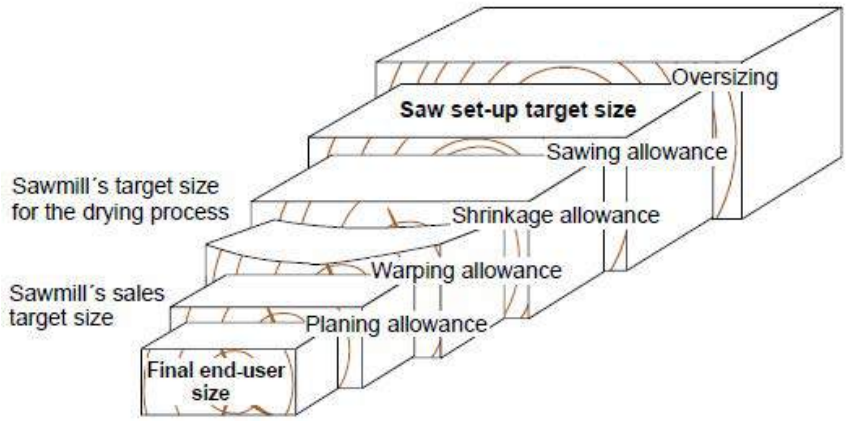


**Fig. 1. Volume decreasing factors for sawn lumber (Vuorilehto, 2001).**

Recovery rate (or yield) is one of several important factors influencing sawmill economics. Recovery rate refers to the cubic meter sawn timber output expressed as a percentage of the cubic meter round log input into the sawmilling process. There are a number of influences on the recovery rate, including the ability, experience and skill of the miller, the nature of the mill, species of tree cut, dimensions of the sawn timber cut and quality and dimensions of the log input (Smorfitt et al., 1999). Various techniques in wood processing such as the use of thin-kerf saw blades, laser beams, and automatic control of workpiece feed rate have been introduced to help increase wood product recovery and improve upon the surface quality of wood products thus curbing forest degradation (Okai et al., 2005).

In sawmills, the transformation process is separated to two main stages: Primary and secondary breakdown. Cylindrical-shaped logs or smooth-edged and big-sized cants are cut to slabs or four-squared lumbers in primary log breakdown process. However, the outputs in this process are usually regarded as semi-finished and need some additional sawing process like edging, trimming, planing etc. defined as secondary breakdown (Görgün & Ünsal, 2017).

The ripsaw can take already edged wide boards or cants and rip them into multiple smaller pieces in one pass significantly boosting production. It can significantly increase production by allowing the headrig to concentrate on cutting wide pieces that are broken rapidly with the gang rip. Circular sawing machines are usually used. They can have difficulty sawing thick parts. Wider diameters can be preferred in similar situations, however sawing accuracy can decrease with increasing diameter. Thicker saw blades can be used but manufacturers tends to reduce thickness of saws for reduce yield. Reducing of circular saw thickness can cause occurrence of high vibrations, which appears if working circular speed is higher than permissible circular speed, which decreases quality of processing (i.e. Increases roughness and decreases accuracy of workpiece dimensions), enhance noise and decrease tool durability (Skoblar et al. 2016).For this reason, double arbor circular sawing machines were developed. Cristóvão et al. (2013) emphasized that compared to a single arbor circular sawblade, a double arbor blade offers the advantage of increasing the sawing accuracy and reducing the kerf losses to minimize sawdust waste. Double arbor saws are also able to run at high feed speeds with small variations of accuracy. Otherwise, saw blade thickness has to satisfy needed stiffness.

Nowadays, multiple horizontal band saws can be preferred alternatively to circular saws. Two to seven horizontal band saws are consecutively aligned for ripping process. It seems that the change as frame or circular saw to band saw in headrigs have been experienced in ripsaw

process. Manufacturers specified that the band saws were started to prefer for slab ripping for sawing efficiently this thin materials (Figure 2).



**Fig. 2. (Left) Multiple horizontal band saws for ripping process, (Right) Slab sawing**

However, only technical improvement for the material isn't always enough for sawmills that are commercial enterprise. When the sawmills give an investment decision as all factories, they take considers many factors such as ease of use, energy consumption, investment and usage costs, suitability for mass production, number machine operator, requiring qualified operator etc. which are specific to management with mentioned technical production factors (Figure 3).

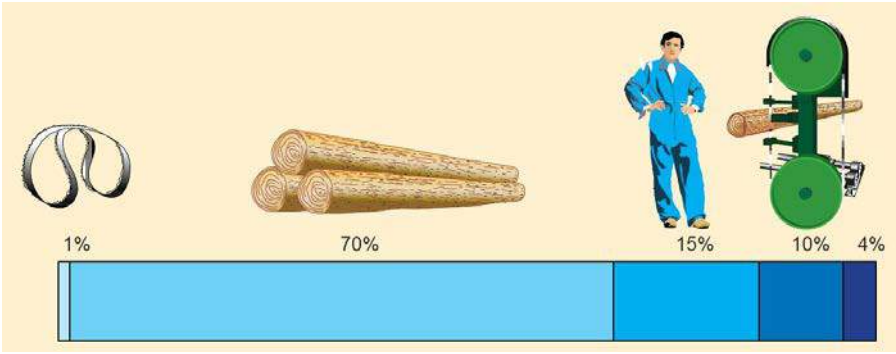


**Fig. 3: Economic ratios of manufacturing units in a sawmill (Sandvik Steel, 1999)**

After considering all technic, economic and management criteria, sawmills give decision due to being commercial companies. For example, softwood sawmills rapidly adopted bandsaw headrig technology to the extent that it is currently unusual to find circular saw headrigs in a softwood sawmill due to saw kerf reduction in primary breakdown process. However, hardwood sawmills faced with a different economic situation, have been relatively slow to adopt bandsaw headrigs (Steele et al., 1997).

As with any investment, the decision to purchase a machine for ripsaw requires careful consideration and analysis. In this paper, some important aspects that need to be considered when deciding whether to purchase a machine for ripsaw or choosing size, capacity etc. needed will be evaluated.

## 1. COMPAREMENT CRITERION

When the sawmills give an investment decision, many factors such as ease of use, energy consumption, investment and usage costs, suitability for mass production, number of machine operator, requiring qualified operator which about technic and management are considered. After considering all these criteria, sawmills try to give right decision due to being sustainable commercial companies.

In this paper, the selection of sawing machine type were evaluated for ripping process. Various characteristics of horizontal band saws and circular saw machines were compared in regard to technical and management criteria. For being reference in comments, a comparison chart were prepared with using commercial sawing machine specifications (Table 1).

**Table 1: Commercial rip saw machines comparison chart**

| Saw* Type | Model | Max. cutting width (mm) | Max. cutting thickness (mm) | Power | Reference |
|---|---|---|---|---|---|
| B | Wood-Mizer HR500 | 280 | 400 | 15HP per head (11.2 kW) | Wood-Mizer, 2018 |
| B | Form İKLT G420 | 400 | 300 | 2 x 18,5 kW | Form, 2018a |
| B | Fimaksan Fİ.100 HYM | 400 | 300 | 2 x 22 kW (2 x 30 HP) | Fimaksan, 2018a |
| B | Dörtlü Yatay Şerit Makinesi | 250 | 310 | 4 x 11 kW | Ormak, 2018 |
| B | Üstünkarlı UYYM_120 | 450 (opt. 600) | 300 | 37 kW (50 HP) | Üstünkarlı, 2018a |
| C | Mebor VC 700 D | 650 | 350 | 160 kW + 132 kW | Mebor, 2018 |
| C | Üstünkarlı UDKD_260 | 600 | 260 | 2 x 90 kW (125 HP) | Üstünkarlı, 2018b |
| C | Form CKADM 160 | 980 (Mill working field) | 160 | 58 kW | Form, 2018b |
| C | Fimaksan FMR-220 | 350 | 220 | 2 x 75 HP | Fimaksan, 2018b |

*B: Horizontal bandsaw, C: Circular saw

### 1.1. Sawing Characteristics

#### 1.1.1. Saw Blade Characteristics

Band saw machine is widely used for the following reasons: it has a high cutting efficiency because the band cuts continuously with no wasted motion; material loss is small due to the small kerf of the saw cut; the feed rate through the material may be varied; the machine can handle workpieces of large dimensions (Ko & Kim, 1999). Especially dimension limits and thin kerf draw the attention with being the most important difference from circular saw,

A horizontal bandsaw machine was characterized by a thin-kerf sawing technology (kerf-width 1.6 mm) compared to the conventional bandsaw machines of kerf-widths ranging from 3.0-4.5 mm (Okai et al., 2016). This means that they have a narrower kerf than circular saws and it results in less sawdust and more quantity yield.

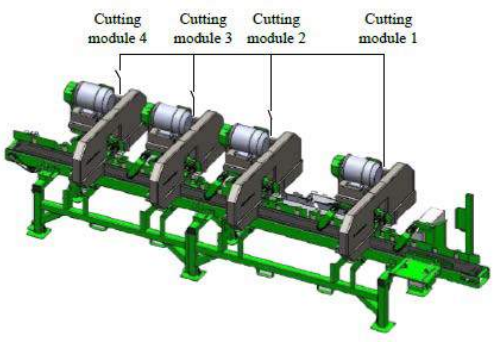




**Figure 4. Left: Schematic diagram of the horizontal bandsaw for rip-saw (Wissamitanan et al., 2017), Right: A commercial horizontal bandsaw in action (Wood-Mizer, 2018)**

### 1.1.2. Probabilities Of Sawing Error

The problems can occur when sawing with bandsaw machine: Cracks in the saw, vibrating saw, saw runs forward when entering the cut and deviates constantly, blade overheating, saw snakes in cut. Feeding speed, wrong hook angle choice, teeth failure etc. can cause these problems. However, suitable and right maintenance will solve many of them (Hiziroglu and Adams, 2003).

When the sawing machines compared, some timber species with dense knots are easier to saw because circular saws are thicker and more rigid (Folkema, 1992). In bandsaws, inorganic matters, sands etc. in wood has more risk of damage during sawing (Çolakoğlu, 2005). On the other hand, thinner band saw is already under stress with straining between wheels, bending on wheels, feeding forces, cutting forces. They generate more possibilities deformation, cracking or breaking of saw blade. Maintenance operations as welding decrease strength of blade. All deformations on the blade cause decreasing sawing accuracy. This kind of mistake is difficult to notice and find during sawing due to aligned bandsaws. It may be understood with evaluating finished workpiece, listening sawing sound or alignment with laser.

Smorfitt et al. (1999) pointed out that there are different views on this issue. Circular saw proponents point to the higher throughput, which clearly is achievable by circular saws for log sawing, and frequently refer to the wave effect of the wandering bandsaw blade resulting in further costs associated with dressing of sawn boards. On the other hand, bandsaw proponents claim a well-cut board from a bandsaw should need little dressing, and that the wave effect is due to poor maintenance of the guides on the mill and a lack of experience of the mill operator.

### 1.1.3. Sawing Mismatch

Circular sawing machines with double arbors are used for higher feed speed and yield when sawing thick work pieces instead of one-arbor machines. However, the saw blades overlap at the center of the board width and there a risk that the saw blades become misaligned which in turn leads to saw mismatch, an unevenness seen on the surface of the sawn timber. Additionally saw mismatch occurs when the saw blades are displaced in axial direction with respect to each other due to wear, heat or mechanical disturbance (Grönlund et al., 2009; Berglund, 2014) (Figure 5).

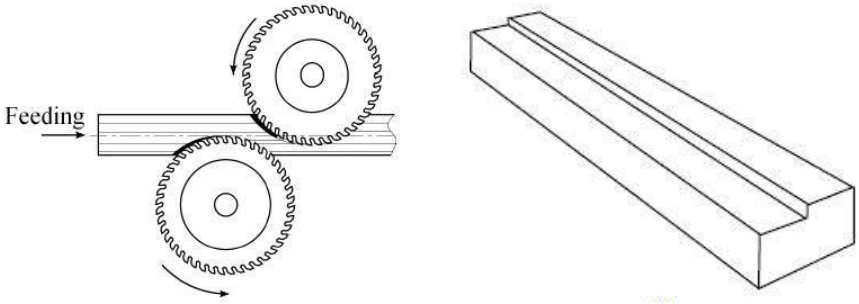


**Figure 5. Left: Circular sawblades in a double arbor sawing machine with a certain overlap (Cristóvão, 2013), Right: Sawing mismatch spreads along the lengthwise direction of lumber (Berglund, 2014)**

### 1.1.4. Mode Of Chip Removal

Chip removing is an important issue while machining. If the chip can't be removed, chip in the gullet area will cause pressure. The pressure can cause stress and possible cracks in sawblade and increase power consumption. Sawblade can heat due to increasing friction, blade deformations or burning of wood surface can occur.

When the compared the sawing machines, saw teeth of circular saw has longer path in workpiece than horizontal bandsaw. In other words, the chip will stay longer in workpiece during sawing. On the other hand, gravity assists chip removal with relatively vertical sawing line in circular sawing machine. Horizontal bandsaw can occasionally overstrained (Figure 6).

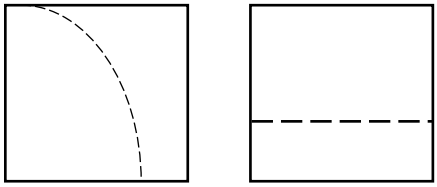

**Figure 6: Sawing lines in work piece (Left: Circular, Right: Horizontal Band Saw)**

Even though swaging is performed to move easily the sawblade sheet in workpiece, the sheet effects the chip removal and energy consumption while sawing. Contrary to popular opinion, sawblades of horizontal bandsaws are exposed to less cutting forces. Therefore, narrower sawblades (or sheets) is preferred. The sawblade comparison for ripping process can be seen in Figure 7. As seen that sawblade of horizontal bandsaw takes less space in workpiece while sawing and it is thought that it can decrease the energy consumption.

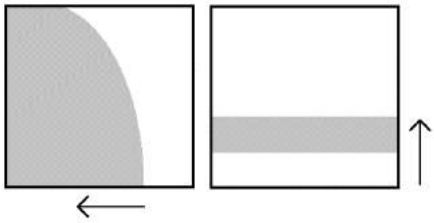

**Figure 7: Sawblade areas in work piece during sawing (Left: Circular, Right: Horizontal Band Saw, Arrows: Workpiece movement, Grey areas: Sawblades)**

### 1.1.5. Sawing Flexibility

A sawing machine should have flexibility to process workpieces of large dimensions. The main feature of band saws compared to others is that they have a high flexibility in terms of sawing dimensions (Çolakoğlu, 2005). Bandsaws have limits for width due to distance between wheels. The thickness flexibility is carried out with vertical movement of the machines. Moreover, if the horizontal bandsaws are well whetted and adjusted, thin panels can be manufactured and therefore, these type of machines are mostly used for veneer production (Burdurlu, 1995; Wravor, 2018).

The dimension flexibility for circular sawing machines is achieved by the ability to adjust the saws in one of the fixed widths or the others in varying widths. However, the thickness of the part is limited to the height of the machine's entrance, and even the numbers of many ripping machine models include this height (Mebor, 2018; Üstünkarlı, 2018; Form, 2018a; Fimaksan, 2018 etc.).

As seen in comparison chart (Table 1), horizontal band saw machines have relatively more cutting thickness flexibility than circular sawing machines.

### 1.2. Managerial Criterion

#### 1.2.1. Energy Consumption

Many factors such as feeding and cutting speed, depth of cut, wood properties (density, moisture content, grain direction etc.) influences the energy consumption (Wissamitanan et al., 2017). However, motor power and other some machine characteristics can be compared in this context. Because, as Monteiro et. al, (2017) indicated that, the amount of active energy consumed varied with the power of the saw motor. For example, it is thought that narrower bandsaw teeth can decrease energy consumption when compared with circular sawing machine. In addition, the main motor tries to rotate all saws with arbor at the same time and all saws cut the workpiece at the same time. In the horizontal bandsaws, each sawblade connected different main motor and each saw starts to cut after some time than the previous one (Figure 8).



**Figure 8: Sawing order difference in the machines (Right: Or-mak, 2018)**

On the other hand, the power needs are greater in circular saws, due to the angular changes between the cutting direction and the fiber direction at the sawing point where the saw teeth come into contact with the wood, and because the sawing line is wider.

As seen in Table 1, horizontal bandsaws need lower energy to run main motor than circular saws. In other words, the sawmill companies can save electricity with using bandsaw.

#### 1.2.2. Maintenance

For maintenance, circular saws are cheap and easy to maintain, working systems are simple (Çolakoğlu, 2005). In the bandsaw, repair work such as welding takes time and the number of applications to the saw is limited. In addition, the replacement of faulty saws is much more difficult.

#### 1.2.3. Labor and Usage

It can be said that required operator is similar. Only, operator and maintenance workers in band saws should be more qualified than in circular saws. Otherwise, two operators is enough for each machine. In some horizontal bandsaw manufacturer offer an alternative with conveyor for returning unfinished workpieces (Figure 9).




**Figure 9. Extra conveyor option to return unfinished workpiece in horizontal bandsaws. (A: Returned workpiece)**

Safety is an important factor to operate a sawing machine. Especially breaking of saw blade in the bandsaws during cutting creates dangerous situations for operators. Circular sawing machines are safer with the saws being always in a case.

### 1.2.4. Covering Area

On the other hand, horizontal band saws take up more space in a sawmill. More than one band saw, distance between each other, workpiece feeding and taking tables need more space than circular saw. Circular sawing machines have smaller area due to circular saws aligned through the arbor on parallel to workpiece width. This difference can be significant while planning sawmill.

### 1.2.5. Suitability for Serial Production

Circular sawing machines for ripping process are available in serial production systems. The systems need automatically workpiece feeding and processing properties. Due to sawn pieces vertical and moving independent of each other, they can be separated with an extra separation metal and outer pieces can be easily transferred to another production line. On the other hand, this separation system needs “inventions”. Because the pieces lays above each other even after sawing process. For separation, the sawn pieces can be turned $90^{o}$ without falling or another mechanism can be improved. However any new mechanism will be extra cost and it is thought that it may not be simple as separation metal.

## CONCLUSION

In this review paper, circular sawing machine and horizontal band saw machine were compared theoretically. The machines were compared with technical and managerial perspective for more integrated approach. Technical criteria were saw blade characteristics, probabilities of sawing error, sawing mismatch, mode of chip removal, sawing flexibility, while managerial criteria were energy consumption, maintenance, labor and usage.

It can be said that band saw machine with the advantage of smaller kerf, sawmill owners started to try it in rip process. Due to increasing operational expenses of sawmills due to several reasons and increasing value of solid wood material, better yields of every raw material became more important.

However, all comparisons showed that both machines have advantages and disadvantages. The sawmill owner should evaluate consider all criteria and create own solution.

On the other hand, this study contains theoretical assessments. Surveys with operators and sawmill owners, controlled experiments, adding other factors for wood machining optimization such as tool wear, surface quality, sawing accuracy, cutting power and force, dust emission etc. should be evaluated for better assessments.

## REFERENCES


Aguilera, A., & Martin, P. (2001). Machining qualification of solid wood of Fagus silvatica L. and Piceaexcelsa L.: Cutting forces, power requirements and surface roughness. Holz als Roh-und Werkstoff, 59(6): 483-488.

Berglund, A. (2014). Efficient utilization of sawlogs using scanning techniques and computer modelling, Doctoral Thesis, Luleå University of Technology, Skellefteå, Sweden.

Burdurlu, E. (1995). Lumber Industry and Drying, Bizim Büro Printing House.

Cristóvão, L. (2013). Machining properties of wood: tool wear, cutting force and tensioning of blades. Doctoral Thesis, Luleå University of Technology, Skellefteå, Sweden.

Cristóvão, L., Ekevad, M., & Grönlund, A. (2013). Industrial sawing of Pinus sylvestris L.: Power consumption. BioResources, 8(4), 6044-6053.

Çolakoğlu, G. (2005). Lumber Industry, Lecture Note (Unpublished), Forest Industry Engineering Department, Faculty of Forest Karadeniz Technical University, Trabzon, Turkey.

Fimaksan, 2018a, Fİ.100 HYM / 2 Hidrolik Yatay Markol, FİMAKSAN: Wood working, machinery, http://www.fimaksan.com/default.asp?page=urunlerimizic&id=21

Fimaksan, 2018b, Fmr-220 Çift Milli Paletli Çoklu Dilimleme, FİMAKSAN: Wood working, machinery, http://www.fimaksan.com/default.asp?page=urunlerimizic&id=30

Folkema, M.P. (1992). Handbook on portable handsaw-type sawmills. Forest Engineering Research Institute of Canada, FERIC Handbok No. 10, March 1992.

Form, 2018a, Twin Bandsaw Debarking Machine (IKLT G420), FORM: Wood And Palette Processing Machine, http://www.formmaksan.com/en/Urunler/UrunDetay/14/ikili-kapak-yarma-makinasi.html

Form, 2018b, Double Edger and Slicer Machine (CKADM 120 -160), FORM: Wood And Palette Processing Machine, http://www.formmaksan.com/tr/Urunler/UrunDetay/8/cift-kenar-alma-ve-dilimleme-makinasi.html

Görgün, H.V., Ünsal, Ö. (2017). Approaches On Primary Log Breakdown Process. Kastamonu University Journal Of Forestry Faculty, 17(3), 479-490.

Grönlund, A., Flodin, J., Vikberg, T., Nystrom, J., Lundgren, N. (2009) Monitoring of lumber size, shape and mismatch in double arbour saws - Development and validation of a scanning equipment. In T. D. Handong Zhou Nanfeng Zhu (ed.) Proceedings of the 19th International Wood Machining Seminar (Nanjing: Nanjing Forestry University), pp. 222-227.

Hiziroglu, S., & Adams, W. (2003). Efficient Use of Bandsaws in Lumber Manufacturing. Division of Agricultural Sciences and Natural Resources, Oklahoma State University.

Ko, T.J., Kim, H.S. (1999). Mechanistic cutting force model in band sawing. International Journal of Machine Tools and Manufacture, 39(8), 1185-1197.

Kometter, R., Maravi, E. (2007). Metodología para elaborar tablas nacionales de conversión volumétrica de madera rolliza en pie a madera aserrada calidad exportación. Comisión Centroamericana de Ambiente y Desarrollo-The World Bank. Managua, Nicaragua. 32p.

Mebor, 2018. Multi rip saw VC 700 D – Double arbor, https://www.en.mebor.eu/mebor-woodworking-machines-for-sale/mebor-circular-saws/mebor-multi-rip-saws/multi-rip-saw-vc-700-d-double-arbor/

Monteiro, T.C., Lima, J.T., da Silva, J.R.M., Trugilho, P.F., Baraúna, E.E.P. (2017). Energy balance in sawing *Eucalyptus grandis* logs. BioResources, 12(3): 5790-5800.

Okai, R., Tanaka, C., Ohtani, T., & Iwasaki, Y. (2005). Application of a novel technique for band sawing using a tip-inserted saw regarding surface profiles. Holz als Roh-und Werkstoff, 63(4): 256-265.

Okai, R., Banful, E. A., & Mitchual, S.J., (2016). Dynamics of Lumber Production from Buttressed-Stumps of Logging Residues Using a Fuel Powered Horizontal Mobile Bandsaw Machine. Journal of Environmental Science and Engineering A 5:82-89

Or-mak, 2018, Dörtlü Yatay Şerit Makinesi, OR-MAK Orman Ürünleri Makine İmalatı, http://www.ormak.net/?page_id=127

Sandvik Steel, (1999). Ahşap Şerit Testerelerin Üretimi, Kullanımı ve Bakımı El Kitabı.

Skoblar, A., Andjelic, N., Zigulic, R. (2016). Determination Of Critical Rotational Speed Of Circular Saws From Natural Frequencies Of Annular Plate With Analogous Dimensions. International Journal for Quality Research, 10(1).

Smorfitt, D. B., Herbohn, J. L., & Harrison, S. (1999). Factors in the acquisition and utlisation of portable sawmills in Queensland. Australian Forestry, 62(1), 45-50.

Steele, P. H., Gazo, R., Araman, P.A., Jackson, D.J., Beard,J. (1997). Band vs. Circular Sawmills: Relative Labor & Maintenance costs. Southern Lumberman. June: 22-25.

Üstünkarlı, (2018a), Horizontal Band Resaws, ÜSTÜNKARLI Log Sawing Lines, http://ustunkarli.com/project/horizontal-band-re-saws/

Üstünkarlı, (2018b), Pallet Chain Feeding Double Spindle Multiple Rip Saws, http://ustunkarli.com.tr/project/paletli-cift-milli-coklu-dilme-makinalari/

Vuorilehto, J. 2001. Size Control of sawn timber by optical means in breakdown saw machines. Doctoral Thesis. Helsinki University of Technology, Department of Forest Products Technology, Laboratory of Wood Technology. Report 88. ISSN: 1456-6419.

Wissamitanan, T., Dechwayukul, C., Thongruang, W. (2017). Practical Sawing Parameters for Efficient Energy Usage of Horizontal Bandsaw for Rubberwood Sawing. Engineering Journal Chiang Mai University, 24(2): 47-53.

Wood-Mizer, 2018, Wood-Mizer Horizontal resaw - HR500, https://www.youtube.com/watch?v=E9LYpDslsIw, https://woodmizer.com/us/IndustrialEquipment/Resaws/HR500

Wravor, 2018, WRC 1050 Veneer - Automatic bandsaw for cutting thin veneer, https://www.wravor.com/wrc-1050-veneer.html

ANADOLU ÜNİVERSİTESİ

ESKİŞEHİR TEKNİK ÜNİVERSİTESİ
MİMARLIK VE TASARIM FAKÜLTESİ

# 5.

Uluslararası International
Mobilya Furniture
Kongresi Congress

Sempozyum Bildiri Kitabı

# Proceedings Book

## "Yenilikçi ve Gelecekçi Yaklaşımlar"

1-4 Kasım 2018